NICOTRA Gebhardt

EC FAN PFP
OPERATING MANUAL

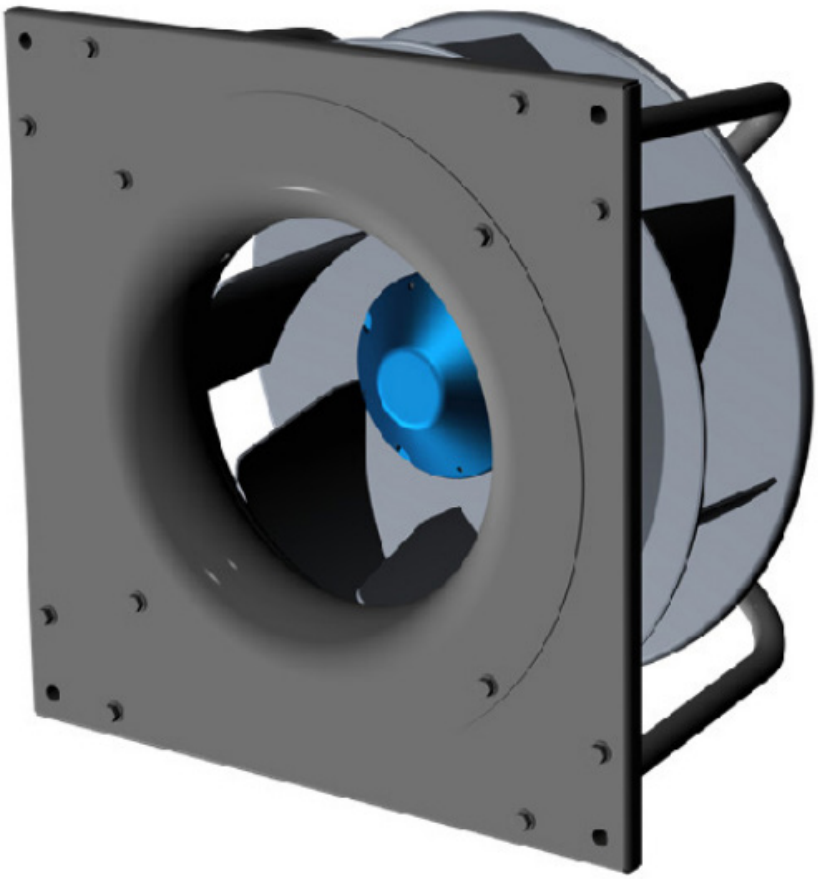

Regal Beloit Italy S.p.A.

Via Modena, 18
24040 Ciserano (BG) ITALY
Phone +39 035 873 111
Fax +39 035 884 319
www.regalbeloit.com

Edition 3 - Rev. 3 - 27/02/2023

INDEX

1. DEFINITIONS AND WARNINGS 5
   1.1 Object of this manual 5
   1.2 Symbols used 5
   1.3 Qualified personnel 5
   1.4 Use for intended purpose only 5
   1.5 Safety instructions 6
   1.6 Informative letter 7
   1.7 Safe operating area 7
2. REGULATORY REFERENCES 8
   2.1 Mechanical and electrical safety 8
   2.2 Electro-Magnetic Compatibility (EMC) 8
   2.3 Surge protection 9
3. DATA PLATE 10
4. TRANSPORT AND STORAGE 11
5. PACKING CONTENTS 11
6. UNPACKING 12
7. PRODUCT DESCRIPTION 13
8. TECHNICAL DATA 14
   8.1 Dimensional drawings 15
9. INSTALLATION 16
   9.1 Commissioning 16
   9.2 Operation 16
   9.3 Ambient operating condition 16
   9.4 Fan installation 16
   9.5 Accessory installation 17
      9.5.1 Inlet protection guard kit 17
   9.6 Electrical connections 18
      9.6.1 Optionals 20
      9.6.2 Power supply 21
      9.6.3 Control board connection 22
      9.6.4 Connection details 23
         9.6.4.1 Analog 23
         9.6.4.2 Modbus communication 25
         9.6.4.3 Enable signal 26
         9.6.4.4 Pressure and flow meter 26
         9.6.4.5 +24 AUX power supply (for PFP 3-Ph only) 27
         9.6.4.6 Relay (for PFP 3-Ph only) 27
         9.6.4.7 Tachometric, alarm and filter output 28

9.6.4.8 Input Impedances 28
10. OPERATING MODES AND SETTING OPTIONS 29
10.1 Speed control 29
10.1.1 Analog speed control 29
10.1.2 Modbus temporary speed control 29
10.1.3 Modbus fixed speed control 30
10.1.4 Speed control curves: examples 30
10.2 Constant airflow 30
10.3 Asynchronous emulation 30
10.4 PID closed control loop 31
10.4.1 Analog ref. PID closed control loop 31
10.4.2 Modbus temporary ref. PID closed control loop 31
10.4.3 Modbus fixed ref. PID closed control loop 31
10.4.4 Modbus positive/negative feedback 32
10.5 Changing the operation mode 32
11. VOLUMETER MEASUREMENT SYSTEM FOR VOLUME FLOW RATE 33
11.1 General description of the system 33
11.2 How to calculate volume flow rate from pressure probe 34
12. OTHER FEATURES 35
12.1 Filter alarm 35
12.2 Change of limits 35
12.3 Out of functioning range alarm 35
12.4 Flying start (for 3-phase only) 35
12.5 Regeneration (for 3-phase only) 35
12.6 Skip speed range (for 3-phase only) 36
12.7 Soft start 36
12.8 Starting in Closed-loop torque control (for 5.5kW drivers only) 37
12.9 Stop speed (for 5.5kW drivers only) 37
12.10 Locked rotor (for 5.5kW drivers only) 38
13. SAFE OPERATING AREA LIMITATIONS 38
13.1 Speed limitation 38
13.2 Power limitation 38
13.3 Output current limitation 38
13.4 Input current limitation (for 1-phase only) 38
14. OTHER VARIABLES 39
14.1 Bus voltage 39
14.2 Motor voltage 39
14.3 Enable function 39
15. DERATING AND OVERHEATING PROTECTIONS 39
15.1 Driver overheating: DERATING 39
15.2 Motor overheating: THERMAL PROTECTOR 40

16. MASTER & SLAVE MODE 40
16.1 Master and Slave 0-5V PWM out 40
16.2 Master and Slave 0-10V PWM out 40
17. VARIABLE SWITCHING FREQUENCY (for 3-phase - 4 kW and 5.5 kW) 41
18. COMMUNICATION 41
18.1 Temporary holding register 42
18.2 Fixed holding register 42
18.3 Holding register description 43
18.3.1 Holding register 0 43
18.3.2 Holding register 1 43
18.3.3 Holding register 2 44
18.3.3 Holding register 7 44
18.3.4 Holding register 16 44
18.3.5 Holding register 21 44
18.3.6 Holding register 31 44
18.3.7 Holding register 32 45
18.3.8 Holding register 33 45
18.3.9 Holding register 34 45
18.3.10 Holding register 35 45
18.3.11 Holding register 36 46
18.3.12 Holding register 45 46
18.3.13 Holding register 46 46
18.3.14 Holding register 47 46
18.3.15 Holding register 48 47
18.3.16 Holding register 50 47
18.3.17 Holding register 51 47
18.3.18 Holding register 52 47
18.3.19 Holding register 53 47
18.3.20 Holding register 54 47
18.3.21 Holding register 55 48
18.3.22 Holding register 56 48
18.4 Input register description 48
18.5 Fan info and Modbus registers 49
19. ALARM HANDLING 50
19.1 Monitoring 50
19.2 Modbus registers - Alarm description 50
19.3 Blinking LED - Alarm description 51
19.4 Digital alarm output 51
19.5 Alarm reset 51
20. DRIVER REPLACEMENT 52
21. AVAILABLE SOFTWARE 52

1. DEFINITIONS AND WARNINGS

1.1 Object of this manual

The aim of this manual is giving instructions concerning installation, use and maintenance of PFP fans.

This manual refers to fans having a driver with a 5 firmware revision or higher.

1.2 Symbols used

As to the **"WARNING"** and **"CAUTION"** messages, the safety message is a symbol (a triangle containing an exclamation mark) followed by the text indicating the risk level. Its purpose is to warn the user of the potential personal damage that may result from an incorrect use of the machine or from the non-compliance with the use and maintenance instructions.
Failure to comply with these safety messages could cause damage and/or the partial or total destruction of the product or other equipment connected to it or harm people.

As to the **"NOTICE"** message, the safety message does not indicate precisely a risk, it is only for information.

Pictogram	Description
WARNING	Indicates a potential risk situation that can lead to death or serious damage, if it not prevented (ex. amputations, severe burns, loss of vision or hearing loss or visual or auditory sensorial impairment).
CAUTION	Indicates a potential risk situation that could cause less severe or minor damage, if not prevented (ex. cuts, scratches, irritation).
	NOTICE message: it is used for non-physical injuries.
	Danger to persons due to electricity.
	The operations whose execution requires qualified or specialized staff to avoid any danger are indicated with this symbol.

1.3 Qualified personnel

For this Instruction Manual and product labels, a "Qualified person" is someone who is familiar with the installation, mounting, start-up and operation of the equipment and the hazards involved. He or she must have the following qualifications:
Trained and authorized to energize, de-energize, clear, ground and tag circuits and equipment in accordance with established safety procedures.
Trained in the proper care and use of protective equipment in accordance with established safety procedures.
Trained in rendering first aid.

1.4 Use for intended purpose only

The equipment may be used only for the application stated in the manual and only in conjunction with devices and components recommended and authorized by **Nicotra Gebhardt**.

1.5 Safety instructions

The following warnings, cautions and notes are provided for your safety and has a means of preventing damage to the product or components at the connected machines.
Specific warnings, cautions and notes that apply to particular activities are listed at the beginning of the relevant chapters and are repeated or supplemented at critical points throughout these sections.
Please read the information carefully, since it is provided for your personal safety and will also help prolonging the service life of your fan.

This manual is an integral part of the EC Fan PFP and it must be carefully read before using it since it gives important indications with regards to its safe installation, use and maintenance. Keep it with care.

WARNING

Before using the EC Fan PFP, read carefully the following general safety rules.

WARNING

The use and maintenance manual of any domestic appliance or similar device incorporating a PFP fan shall include the following clauses.

WARNING

This appliance can be used by children aged from 8 years and above and persons with reduced physical, sensory or mental capabilities or lack of experience and knowledge on condition that they are supervised and instructed concerning use of the appliance in a safe way and understand the hazards involved.
-> Children shall not play with the appliance
-> Cleaning and user maintenance shall not be made by children without supervision

After taking off the packaging make sure that the fan is intact. In case of doubt do not use it and contact an authorized service centre.
Check that the fan is not damaged in any of its parts. The safety concept of the fan is valid only in perfect conditions.

RISK OF ELECTRICAL SHOCKS

- Any damaged socket, connection terminal or cable must be replaced immediately by qualified technicians or by authorized service centre.
- In case of repair or replacement of the connection cables and/or of the damaged devices or that do not work properly, please contact the authorized service centre.
- Incorrect or improper installation may cause the system to malfunction and/or result in damage to people and/or property.
- Always disconnect the power supply before opening the fan.

Any installation and/or maintenance tasks are only to be carried out by skilled, specialist personnel.
Existing electrical systems must comply with the rules in force in the country where the PFP fan is installed.
Before doing any maintenance, make sure that the power supply and the batteries have been disconnected.
Install an all-pole disconnecting device in the power supply system (in accordance with IEC 60335-1 or IEC 60204-1, as applicable).
Conform to the wiring diagrams shown in the section “ELECTRICAL CONNECTIONS” of this manual.

1.6 Informative letter

The installer and the maintenance man must know the content of this manual. Although the main features of the equipment described in this manual are not subject to change, the manufacturer reserves the right to modify the components, details and accessories it deems necessary to improve the product or to meet manufacturing or commercial requirements at any time and without being obliged to update this manual immediately.

WARNING

ALL RIGHTS ARE RESERVED ACCORDING TO THE INTERNATIONAL COPYRIGHT CONVENTIONS,

The reproduction of any part of this manual, in any form, is forbidden without the prior written authorization of the manufacturer.

The content of this guide can be modified without prior notice. Great care has been taken in collecting and checking the documentation contained in this manual to make it as complete and comprehensible as possible.

Nothing contained in this manual can be considered as a warranty, either expressed or implied - including, not in a restrictive way, the suitability warranty for any special purpose.

Nothing contained in this manual can be interpreted as a modification or confirmation of the terms of any purchase contract.

The **Nicotra Gebhardt** products have not been conceived to work in areas at risk of explosions. In case of damage or malfunction, the DDMP fans must not be used until the Customer Care Technical Service has repaired it.

Customer Care Technical Service

For information concerning the nearest supporting center, please get in touch with your retailer.

WARNING

The original configuration of the fan must not be changed at all, except as prescribed in this manual.
On receiving the fan, make sure the supply corresponds to what has been ordered.
In case of non-compliance immediately inform the manufacturer.
Also make sure the PFP fan has not been damaged during transport.

1.7 Safe operating area

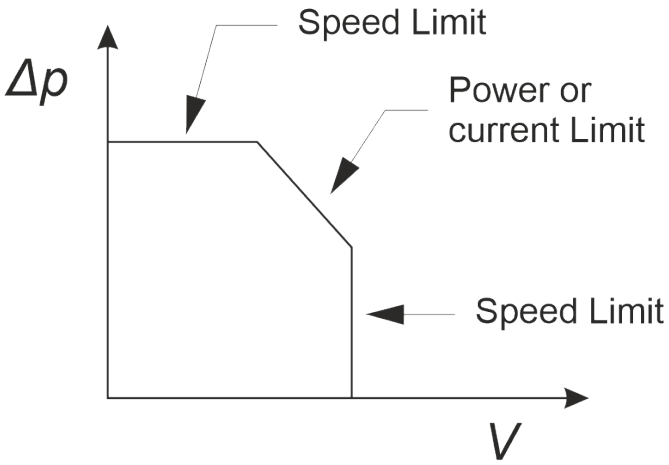

The drivers are protected against overload conditions and a safe operating area is defined by a limit of speed, output power and motor current.
For more details refer to the ANNEX "Analog Signal Considerations".

2. REGULATORY REFERENCES

2.1 Mechanical and electrical safety

These fans with EC drive systems are designed for incorporation in equipment, fulfilling the requirements set by the **Machinery Directive (MD - Dir. 2006/42/EU)**, and those parts of the **Low-Voltage Directive (Dir. 2014/35/EU)** which are applicable in accordance with the MD, where it concerns electrical safety.
Electrical safety is generally achieved by application of the provisions of the **EN 60204-1 standard "Electrical equipment of machines - General requirements"**.
Such safety requirements are covered as far as necessary for a partly complete machine, sub-assembly or component, as these fans are specifically intended for incorporation within other machines.
The responsibility for the mechanical and electrical safety of the installed fan is thus of the manufacturer of the complete machine and, for this reason, it is strictly forbidden to put the fan in operation before the manufacturer of the machine has assessed and declared that the complete machine fulfils all the essential safety requirements set forth by the MD.
Please, check the Declaration of Incorporation which accompanies each product, or ask your **Nicotra Gebhardt** sales representative, for additional information.

2.2 Electro-Magnetic Compatibility (EMC)

Single-phase drive systems: PFP 1.35 kW
The drivers of these products incorporate an Active Power Factor Control module, to provide harmonics filtering and compliance with the EMC requirements applicable to domestic and equivalent environments ("first environment"), or with the advanced requirements for harmonic distortion which often apply to data centers.

Three-phase drive systems: PFP 2.6 kW, 4 kW, 5.5 kW
The drivers of these products are provided with basic EMI filters only.
They are suitable for use in the "first environment", under condition that they are incorporated into an apparatus, system or installation, which is neither a plug-in device nor a movable device.
Such devices shall have to be installed and commissioned only by a professional.

All the PFP drivers, single and three-phase, comply with the immunity requirements set up in:
EN 61000-6-2 – Electromagnetic compatibility (EMC). Part 6-2: Generic standards. Generic standards - Immunity for industrial environments.
Concerning the emissions level, depending on the production model, the PFP drivers may comply either with the requirements set-up in:
EN 61000-6-3 – Electromagnetic compatibility (EMC). Part 6-3: Generic standards. Emission standard for residential, commercial and light-industrial environments
or those defined in:
EN 61000-6-4 – Electromagnetic compatibility (EMC). Part 6-4: Generic standards - Emission standard for industrial environments.

Please, check the Declaration of Incorporation which accompanies each product, or ask your Nicotra Gebhardt sales representative for additional information.

The complete machine into which this product is incorporated must comply with the EMC Directive nr. 2014/30/EU.

Specific electrical safety and EMC standards are applied according to the available models of conformity declaration (identified as 985732 and 985748):

		EMC standards	
		61000-6-3 (household)	61000-6-4 (industrial)
Electrical safety standards	60204 (machines)	985732	985748

To improve the Electromagnetic compatibility a ferrite should be put on the power supply cable (close to the driver). The compliance to the standards is intended for a single fan. No tests have been made on multiple installations.

The compliance to the standards are intended for a single fan.
No tests have been made on multiple installations.

WARNING

The EMC tests are conducted without 485 communication wire, analog signals or Bluetooth devices.

2.3 Surge protection

The drivers installed in the PFP fans incorporate MOV-based surge-protection devices (SPDs) to protect the electronics from power surges.

These devices fulfil the requirements of the IEC 61000-6-2 and IEC 61000-4-5 standards for surge immunity and testing: they withstand without damage 1 kV pulses in differential mode, and 2 kV pulses in common mode.

The internally mounted SPD is a Type 3 SPD, in accordance with IEC 61643-11, intended for local protection of the sensitive electronics. Its design assumes that the power distribution network includes higher-level Type 2 and Type 1 SPDs, where required for protection against lightning strikes, and also against repeating lower-level power surges, generated by sources inside the local network, like any unfiltered contactors of highly-inductive loads (e.g. motors and transformers).

Without filtering or protection, regularly repeating differential-mode low-level voltage surges can lead to permanent damage to the electronics.

3. DATA PLATE

The manufacturer's identification plate is located on the fan.
Several safety warnings are applied to the fan; such warnings must be strictly followed by everyone dealing with this product.
The company is not to be held responsible for damage to property or accidents to people which might occur if the above-mentioned warnings are not observed. In such a case, the operator is the only person responsible.

The identification plate is located on the fan base plate.

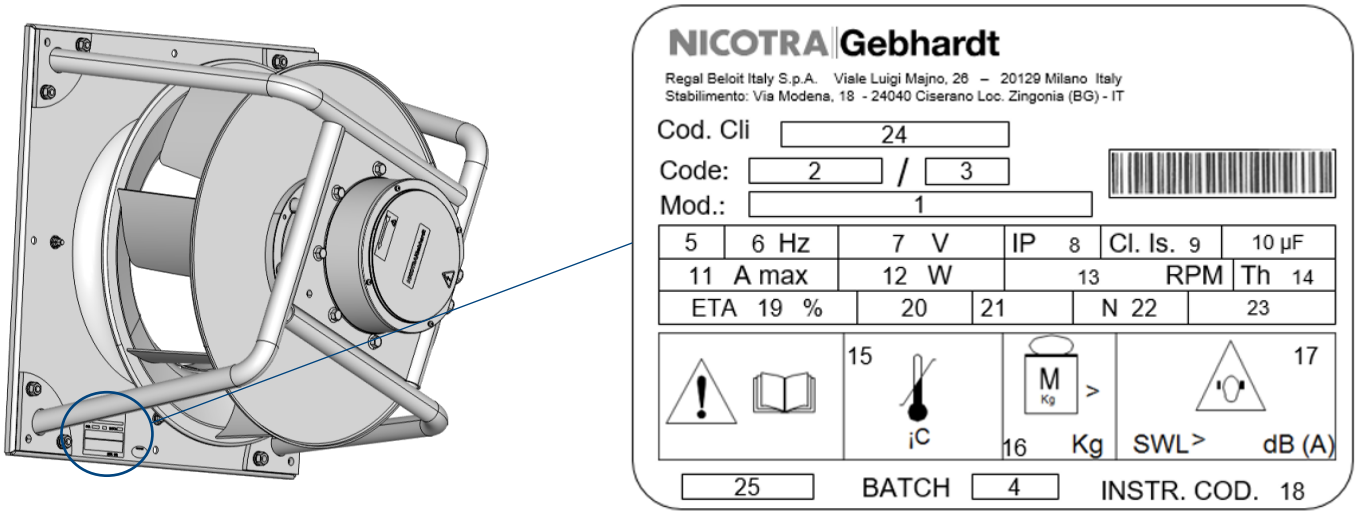

REF.	DESCRIPTION
1	MODEL DESIGNATION
2	REGAL BELOIT ITALY CODE
3	MODIFICATION LEVEL
4	PRODUCTION LOT NO.
5	NO. PHASES & CURRENT TYPE
6	ELECTRICAL FREQUENCY
7	VOLTAGE
8	IP PROTECTION GRADE
9	MOTOR INSULATION CLASS
10	CAPACITOR VALUE (WHEN PRESENT)
11	MAXIMUM CURRENT INPUT
12	MOTOR RATED POWER
13	RATED RPM

REF.	DESCRIPTION
14	THERMAL PROTECTOR (Y/N)
15	OPERATING TEMPERATURE RANGE
16	UNIT EXCEEDS 30KG (Y/N)
17	UNIT EXCEEDS 85 dB (A) SOUND POWER (Y/N)
18	OPERATING MANUAL
19	OVERALL EFFICIENCY (η)
20	EFFICIENCY CATEGORY (STATIC OR TOTAL)
21	MEASUREMENT CATEGORY USED TO DETERMINE THE ENERGY EFFICIENCY (A-D)
22	EFFICIENCY GRADE AT OPTIMUM ENERGY EFFICIENCY POINT
23	ErP COMPLIANCE
24	CUSTOMER CODE (WHEN APPLICABLE)
25	PRODUCTION DATE

4. TRANSPORT & STORAGE

WARNING

Correct transport, storage, erection and mounting, as well as careful operation and maintenance are essential for proper and safe operation of the equipment.
Protect the fan against physical shocks and vibration during transport and storage. Also, be sure to protect it against water (rainfall) and excessive temperatures.

CAUTION

If the fan must be subject to long-term storage, the storage time without application of any power supply shall not exceed two years since fan production or since operating the fan for at least half-an-hour continuously. The storage site shall have a temperature between -20°C and +70 °C, a Relative Humidity lower than 75%, and not be subject to condensation or exposed to dust.

5. PACKING CONTENTS

The fan is delivered in a cardboard box inside which there are the installation instructions and the options required by the Customer at time of order. All these options will be mounted directly by the Manufacturer.

Apart from the "options", the Customer can order "accessories" afterwards. In this case, the Customer will have to install them by him/herself.

The following data are printed on the packing itself:

① 6XXXXXXXXXXXXXXXX
② PFP XXXXXX XX XXX XXXX XXX
③ 123456

REF.	DESCRIPTION
1	ART. CODE
2	MODEL DESCRIPTION
3	BATCH CODE

6. UNPACKING

1. Remove the fan from the box.
2. Remove all the components from the packaging.

WARNING

Check the fan. Before installing the PFP fan, check to ensure that all of the items listed are present and that there are no visible signs of damage.

Dispose of all packing components in compliance with the laws in force in the country of use.

7. PRODUCT DESCRIPTION

The PFP is a backward curved blade fan equipped by an external permanent magnet rotor motor. The rotor magnets are made by rare earths (NdFeB) that strongly reduce the motor dimension and, therefore, the fan obstruction. The motor shape itself has been chosen for increasing the airflow inside the fan scroll.
The Driver is fully integrated into the motor and it drives the motor through a sensorless algorithm. The single-phase driver is equipped with an active PFC (Power Factor > 0.95 in any state of operation).
The Fans of series PFP combine high energy efficiency and low noise level. Thanks to the "EC" (electronic commutation) motors, their electronics integrate speed control and protecting system. This reduces the number of different components required to provide these functions, compared to fans with traditional motors.
The main feature of EC-motor is operating without slip losses, which allow consuming significantly less power than conventional AC motors.
This occurs at all speed levels, especially with partial load operation. The EC complete drive system (i.e. the combination of the permanent-magnet motor with its electronic driver) has a much higher energy efficiency, in comparison with a drive system based on a conventional AC motor.

Features
- Supply voltage 220V-240V or 400V -3Ph+/-10% (50/60Hz)
- Sinusoidal Sensorless control
- Integrated active Power Factor Controller or Single-Phase units
- Simple cable connection with cage clamps
- Integrated Modbus RTU interface
- Integrated analogue interface 0-10V
- Tachometric output available

Performance
- Internal PID available
- Soft start
- Adjustable limits and operating mode
- Self-protecting strategies implemented
- High efficiency
- NTC bypassed during operation
- PFC disabled at stop
- Available with Maximum Power input 1.35k-1Ph, 2.6kW-3Ph, 4kW-3Ph or 5.5kW-3Ph
- Power Factor >0.95 on models with A-PFC

Protection
- Missing motor phase protection
- Short circuit protection
- Overload protection
- Overheat protection
- Impeller blocking protection
- Safe Operating Area (speed, power and current limitation)

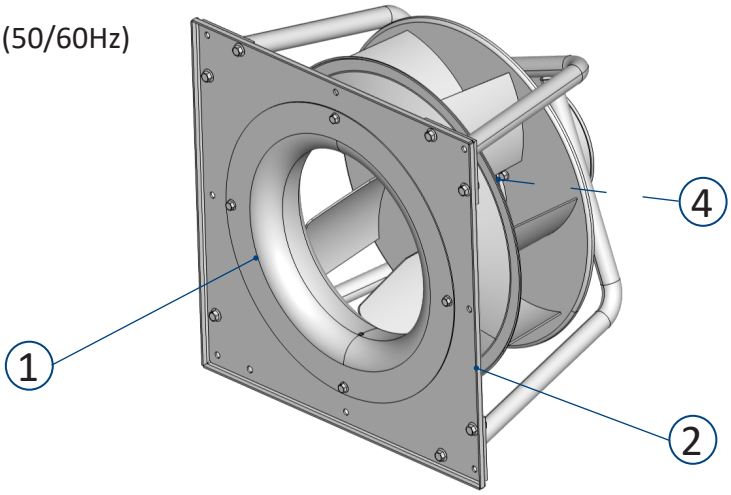

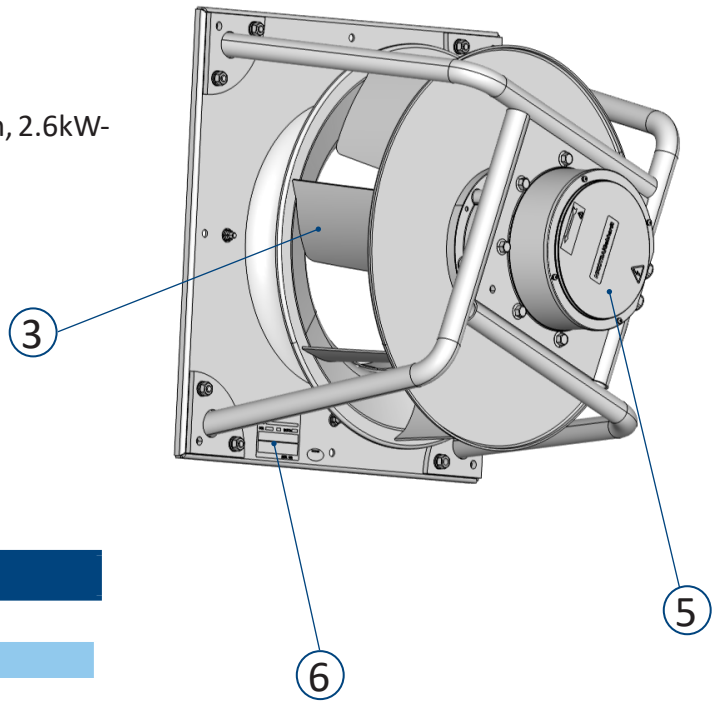

REF.	DESCRIPTION
1	Inlet port
2	Outlet port
3	Rotor (forward-curved blades)
4	EC motor
5	Driver
6	ID plate

8. TECHNICAL DATA

Size	Motor code	Driver code	Driver phases	Abs. curr. (A)	Abs. pow. (W)	Min. temp. (°C)	Max. temp. (°C)	IP class protection
280-A	1416F0	1431F2	1 Ph	5.72	1363	-20°C	+40°C	IP 55
280-A	1416F8	1431F3	3 Ph	2.07	1320	-20°C	+40°C	IP 55
315-A	1416F0	1431F2	1 Ph	5.82	1365	-20°C	+40°C	IP 55
315-A	1416F8	1431F3	3 Ph	2.34	1500	-20°C	+40°C	IP 55
355-A	1416F1	1431F2	1 Ph	5.74	1378	-20°C	+40°C	IP 55
355-A	1416F6	1431F3	3 Ph	3.24	2110	-20°C	+40°C	IP 55
400-A	1416F1	1431F2	1 Ph	5.74	1347	-20°C	+40°C	IP 55
400-A	1416F5	1431F3	3 Ph	4	2600	-20°C	+40°C	IP 55
450-A	1416F1	1431F2	1 Ph	5.71	1327	-20°C	+40°C	IP 55
450-A	1416F7	1431F3	3 Ph	3.64	2370	-20°C	+40°C	IP 55
450-A	1416H7	1431F9	3 Ph	4.5	2860	-20°C	+40°C	IP 55
450-B	1416K5	1431G5	3 Ph	8.7	5760	-20°C	+40°C	IP 55
450-C	1416L1	1431G5	3 Ph	6.3	4150	-20°C	+40°C	IP 55
500-A	1416F2	1431F2	1 Ph	5.82	1390	-20°C	+40°C	IP 55
500-A	1416H5	1431F9	3 Ph	5.96	4122	-20°C	+40°C	IP 55
500-B	1416K6	1431G5	3 Ph	8.7	5820	-20°C	+40°C	IP 55
500-C	1416K6	1431G5	3 Ph	7.5	4840	-20°C	+40°C	IP 55
560-A	1416H6	1431F9	3 Ph	5.86	3980	-20°C	+40°C	IP 55
560-B	1416K7	1431G5	3 Ph	8.3	5600	-20°C	+40°C	IP 55
560-C	1416L0	1431G5	3 Ph	8.4	5515	-20°C	+40°C	IP 55
630-A	1416H8	1431F9	3 Ph	5.14	3500	-20°C	+40°C	IP 55
630-A	1416K8	1431G5	3 Ph	7.9	5200	-20°C	+40°C	IP 55
710-A	1416K9	1431G5	3 Ph	6.6	4390	-20°C	+40°C	IP 55

Other data related to the technical features are reported on the ID plate shown in chapter 3.

8.1 Dimensional drawings

The four main dimensional parameters (**A**, **B**, **C** and **D**) are illustrated in the scheme and the table below, according to the different sizes.

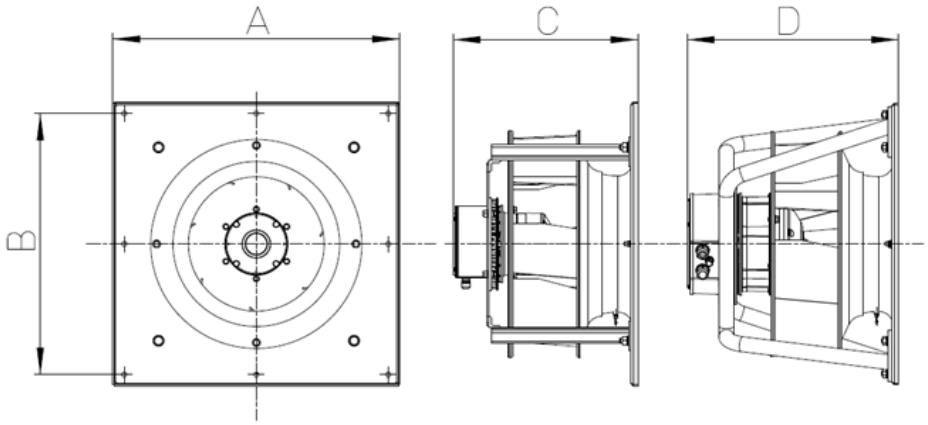

Size	A	B	C	D
280-A	400	350	309	-
315-A	500	450	329	-
355-A	500	450	354	-
400-A	500	450	379	-
450-A	630	580	406	-
450-A	630	580	-	469
450-B	630	580	-	461
450-C	630	580	-	454
500-A	630	580	440	-
500-A	630	580	-	503
500-B	630	580	-	491
500-C	630	580	-	483
560-A	800	750	-	539
560-B	800	750	-	528
560-C	800	750	-	520
630-A	800	750	-	573
710-A	960	910	-	627

9. INSTALLATION

The fan installation must be carried out only by competent and qualified staff.

WARNING

In the final installation, the device shall be directly connected to the supply terminals and shall have a contact separation in all poles, providing full disconnection under overvoltage category III conditions.

9.1 Commissioning

WARNING

Work on the device/system by unqualified personnel or failure to comply with warnings can result in severe personal injury or serious damage to material.
Only suitably qualified personnel trained in the setup, installation, commissioning and operation of the product should carry out work on the device/system.
The PFP fan must be grounded through the PE connector on the driver.
The following terminals can carry dangerous voltages even if the driver is inoperative:

- **the power supply terminals L, N or R, S, T**
- **the motor terminals U, V, W**

9.2 Operation

WARNING

The driver must NOT be removed from the related PFP fan type and size.
The driver cannot be used separate from the related fan.

WARNING

Ensure correct grounding connections. The ground cable must be enough to carry the maximum supply fault current which normally will be limited by the fuses or MCB. Suitably rated fuses or MCB should be fitted in the main supply to the driver, according to any local legislation or codes.

CAUTION

The driver operates at high voltages.
Certain parameter settings may cause the driver to restart automatically after an input power failure.

9.3 Ambient operating conditions

CAUTION

The installation place must be in accordance with the IP protection degree of the fan. In this respect, refer to the ID plate described in chapter 3.

Humidity Range: 90% non-condensing
Altitude: if the fan is to be installed at an altitude > 1000m, derating is required.
Shocks: do not drop the fan or expose it to sudden shock.
Vibration: do not install the fan in an area where it is likely to be exposed to constant vibrations.

9.4 Fan installation

Place the fan according to your needs, after having checked its dimensions and the position of the fixing holes.

9.5 Accessory installation

As previously mentioned, all the required options are generally installed by the Manufacturer before delivery. The following describes the composition, the main features and the mounting procedure of each accessory that is ordered separately.

9.5.1 Inlet protection guard kit

Materials
235 JR steel according to UNI EN 10025
Surface: Fe/Zn 8 according to UNI EN ISO 2081

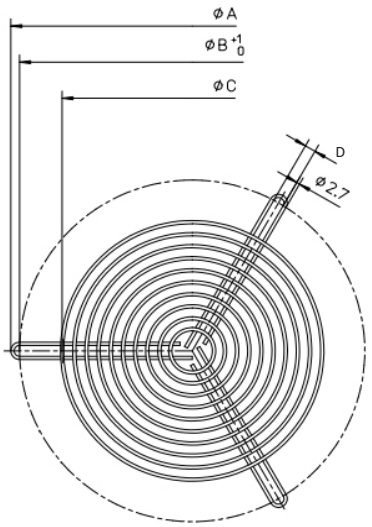

Sizes 280-A / 630-A / 710-A

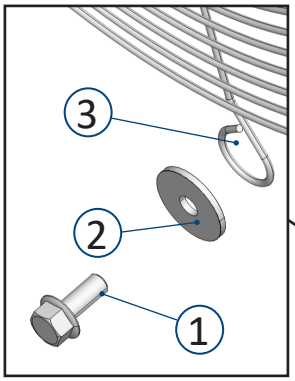

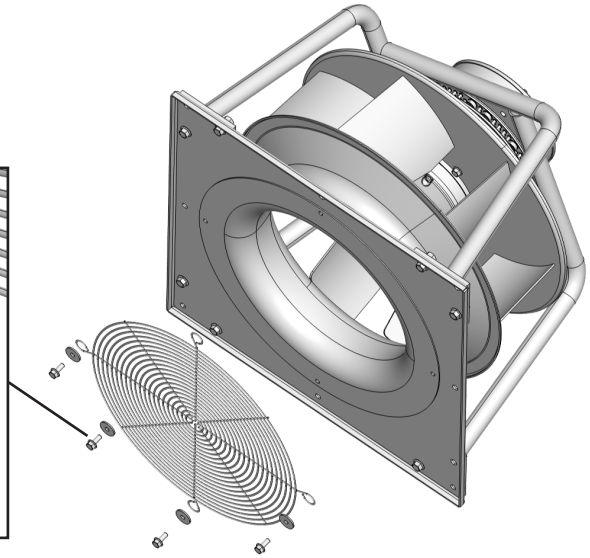

Assembly
In order not to lose the alignment or when the guard is attached with four bolts, proceed as follows:

- overlap the protection guard;
- unscrew and screw bolts (1) and eyelets (2) to holes (3) one at a time.

Size	Code	A	B	C	D
280-A	6891A0	298.4	284	214	9
315-A	6891A1	342.4	317	274	-
355-A	6891A2	377.4	352	314	-
400-A	6891A3	417.4	392	354	-
450-A	6891A4	463.4	438	394	-
500-A	6891A5	513.4	488	434	-
560-A	6891A6	563.4	538	434	-
630-A	6891A7	615.4	601	494	11
710-A	6891A9	688.4	672	554	11

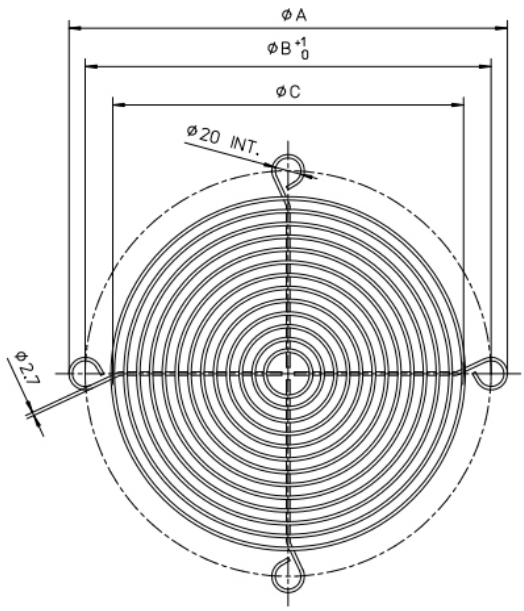

Sizes 315-A / 355-A / 400-A / 450-A /500-A / 560-A

9.6 Electrical connections

PFP 1.35kW 1-Phase

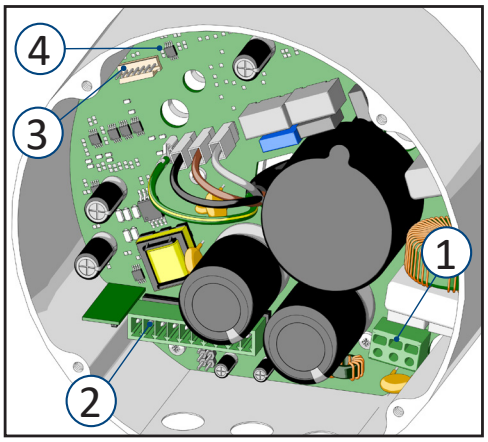

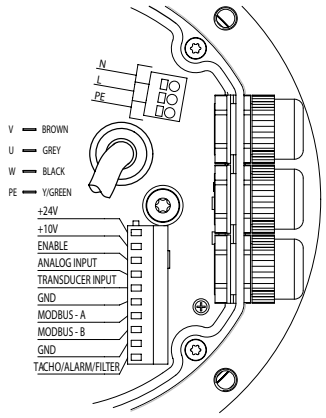

PFP 2.6kW 3-Phase

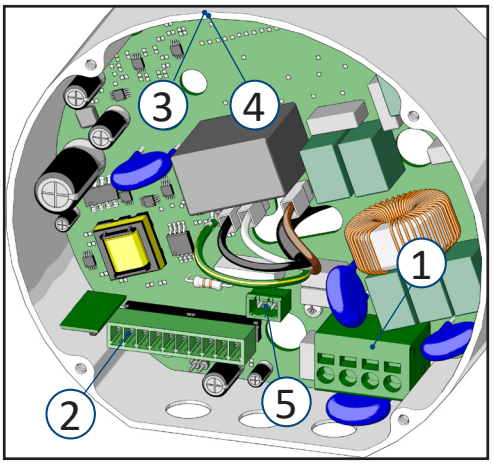

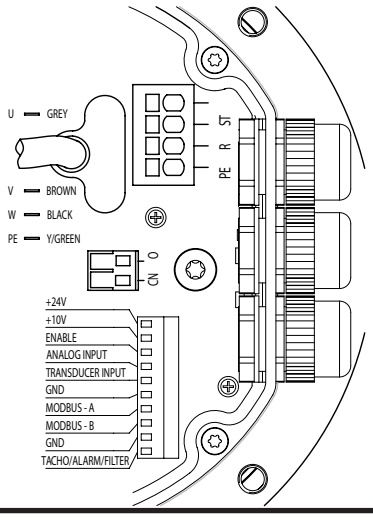

PFP 4kW-5.5kW 3-Phase

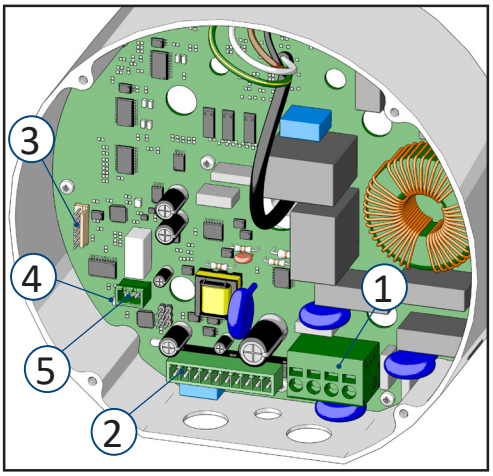

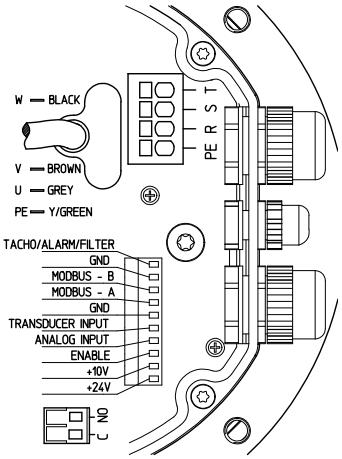

REF.	DESCRIPTION
1	Power supply
2	Control board connection
3	Communication
4	Blinking LED
5	Relay connection

Make sure that a differential switch (circuit breaker) has been installed upstream the line and that it functions properly.

Before carrying out any intervention on the electrical system, disconnect the power supply by means of main switch.

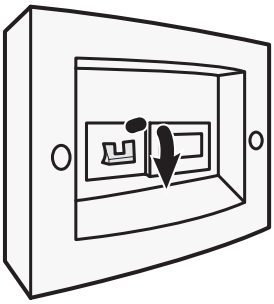

WARNING

Work on the driver/fan by unqualified personnel or failure to comply with warnings can result in severe personal injury or serious damage to material.
Only suitably qualified personnel trained in the set-up, installation, commissioning and operation of the product should carry out work on the driver/fan. This driver must be grounded.
The power supply terminals L, N (1-Phase) or R, S, T (3-Phase) and the motor terminals U, V, W can carry dangerous voltages even if the driver is inoperative.

9.6.1 Optionals

The drivers can be optionally connected by means of the following flush-type connectors:

- *Phoenix Contact SACC-E-M12FS-8CON-PG9/0,5* **(1)** or compatible and *Phoenix Contact SACC-E-M12MSS-3P-M16/0,5 PE* or compatible for 1-phase drivers **(2)**;
- *Phoenix Contact SACC-E-M12FS-8CON-PG9/0,5* **(1)** or compatible and *Phoenix Contact SACC-E-M12MSS-4CON-M16/0,5 PE* or compatible for 3-phase drivers **(2)**.

1-phase drivers

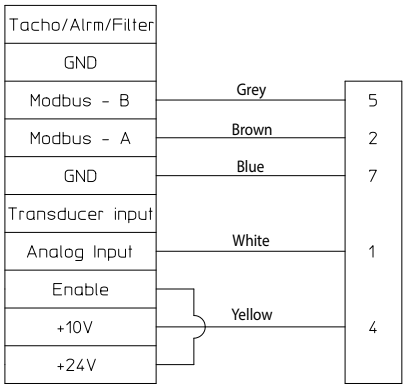

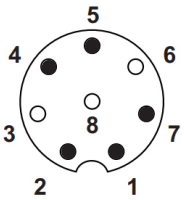

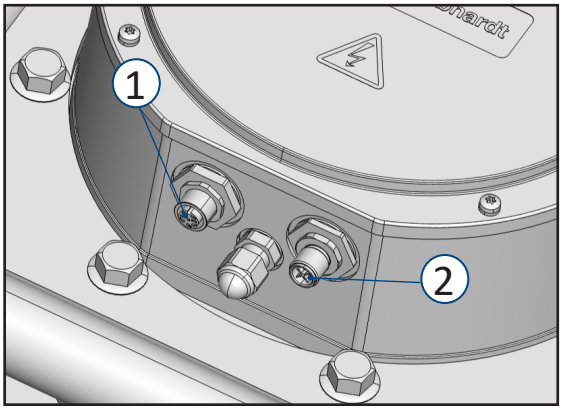

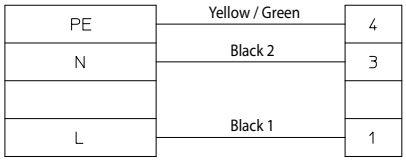

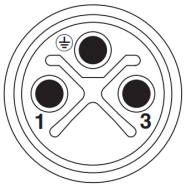

3-phase drivers

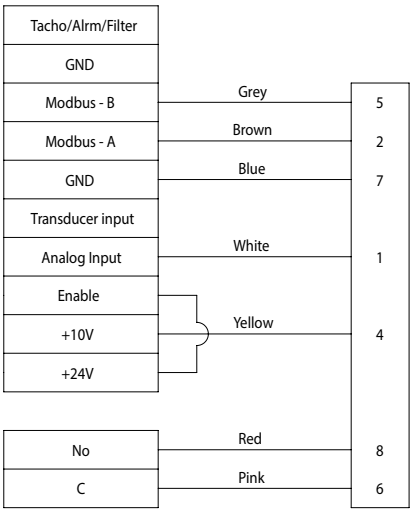

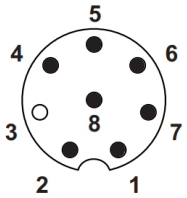

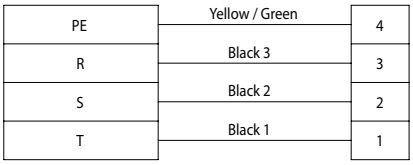

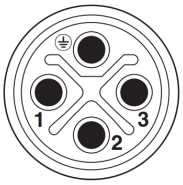

9.6.2 Power supply

The end user must connect the power supply cable and the command signal to the control board, while the motor connection is already done by **Nicotra Gebhardt**.

As concerns the cable minimum section, check the requirements issued by the country of installation.

PFP 1.35kW 1-Phase

Single Phase 220/240V ±10% @ 50/60Hz
The performance in the range [200V-264V] @ 50Hz/60Hz is always the same due to the PFC module inside the driver.

Min. and max. wire section:
Spring-loaded push-in clamp, suitable for
- 0.2 mm² - 24 AWG up to 2.5 mm² - 12 AWG (stranded) or 4 mm² (solid) wire

Use a bladed screwdriver, 0.6x3.5 mm max, to unlock.

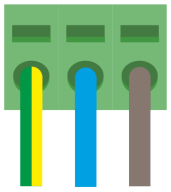

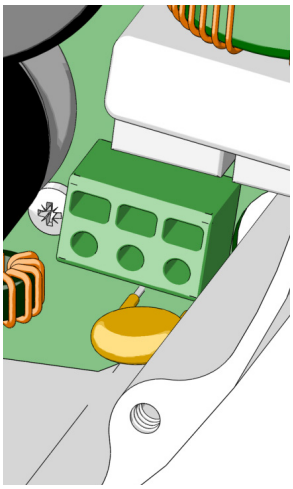

PFP 2.65kW 3-Phase

Three Phase 400V ±10% @ 50/60Hz
The maximum fan performance, within the nominal range of supply-voltage [360-440V], may be sensitive to the actual supply voltage. Whether the fan maximum speed is related to the supply voltage depends on the fan size and duty point.

Min. and max. wire section:
Spring-loaded push-in clamp, suitable for
- 0.2 mm² - 24 AWG up to 6 mm² - 8 AWG (stranded) or 10 mm² (solid) wire

Use a bladed screwdriver, 0.6x3.5 mm max, to unlock.

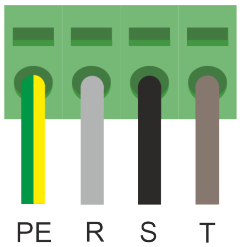

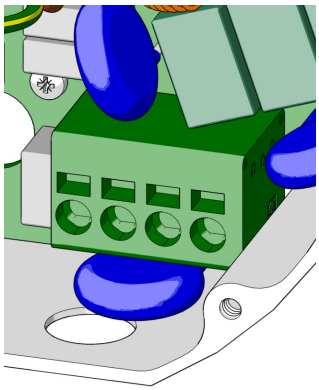

PFP 4kW-5.5kW 3-Phase

Three Phase 400V ±10% @ 50/60Hz
The maximum fan performance, within the nominal range of supply-voltage [360-440V], may be sensitive to the actual supply voltage. Whether the fan maximum speed is related to the supply voltage depends on the fan size and duty point.

Min. and max. wire section:
Spring-loaded push-in clamp, suitable for
0.2 mm² - 24 AWG up to 6 mm² - 8 AWG (stranded) or 10 mm² (solid) wire
Use a bladed screwdriver, 0.6x3.5 mm max, to unlock.

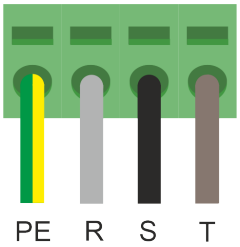

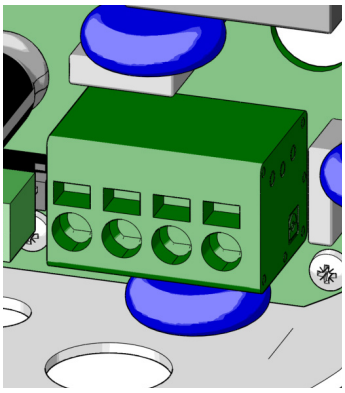

9.6.3 Control board connection

PFP 1.35kW 1-Phase

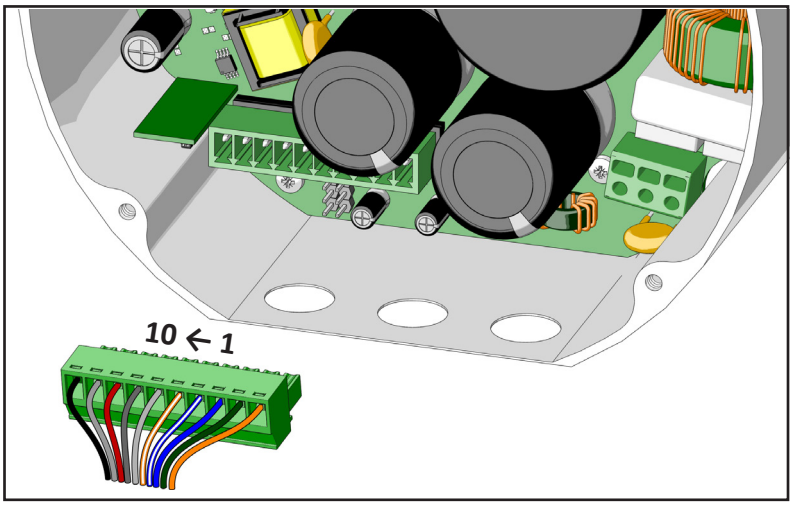

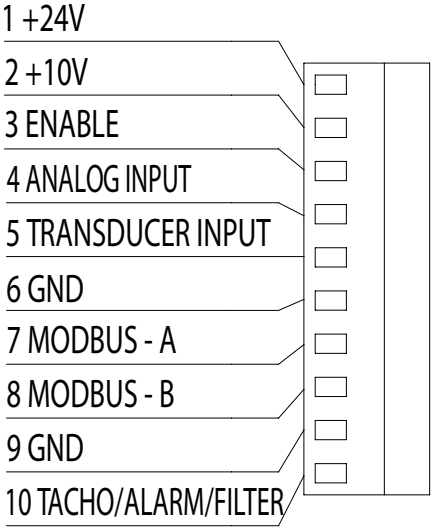

PFP 2.65kW 3-Phase

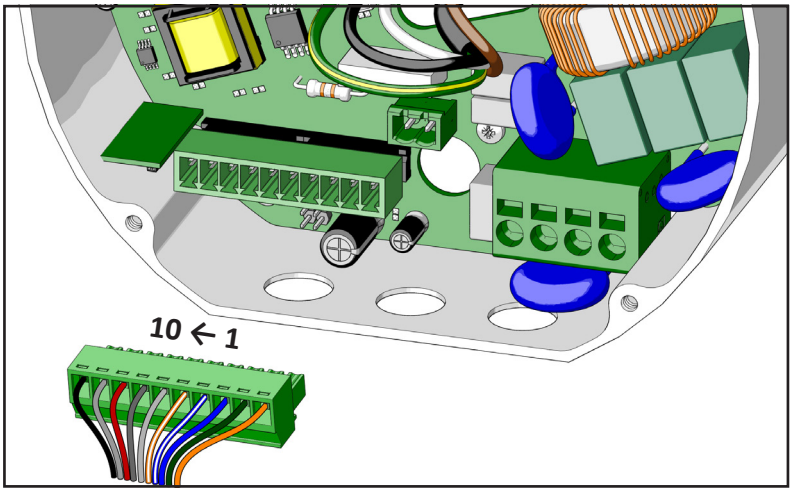

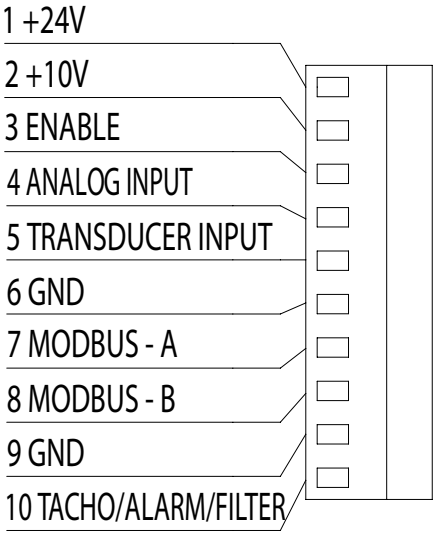

PFP 4kW-5.5kW 3-Phase

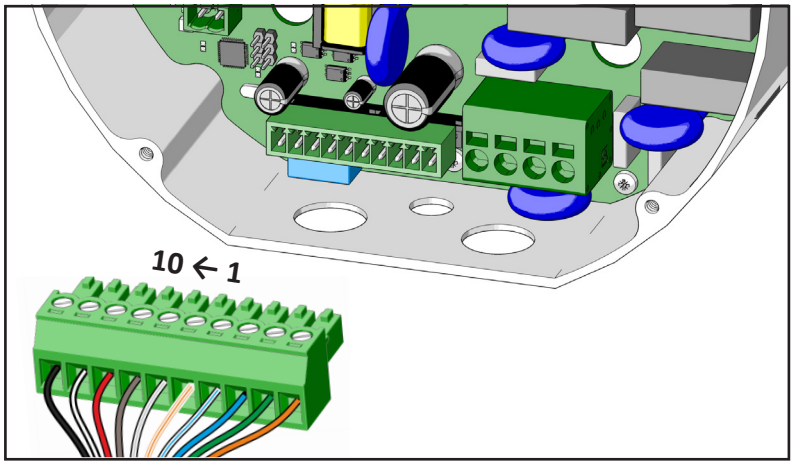

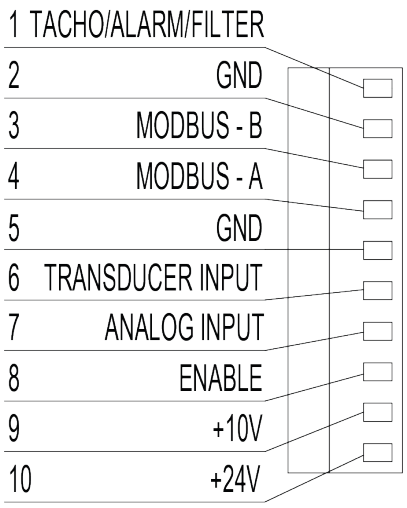

Min. and max. section:

- 0.13 - 1.31 mm² (26 - 16 AWG) solid or stranded cable.

⚠ WARNING

Do not reverse the input signal or connect the +10V, 12V or +24V to signal ground. The driver could be damaged. Do not apply signals with voltage outside the indicated limits, the driver could be damaged.

9.6.4 Connection details

In this paragraph are explained the feature and the possible connection of the control board.
The control board terminals are opto-insulated.

The available features can be different depending on the fan model.

9.6.4.1 Analog

This is the driver default mode and the signal must be connected into the ANALOG INPUT and the reference to GND.
The analog input can accept also a PWM signal with f>1kHz.

See also paragraphs 9.6.4.3 and 14.3.

⚠ WARNING

Do not use devices having the signal GND connected to the NEUTRAL cable of the power supply. The driver may be damaged or not functioning properly.

The available +10V power supply of the driver is intended to be used with a potentiometer of minimum 2KOhm, with a max absorbed current of 5mA.
Any different devices connected to it could bring to an undesired functioning of the driver or of connected device.
Nicotra Gebhardt can provide a dedicated potentiometer: REGPOT code K43138.

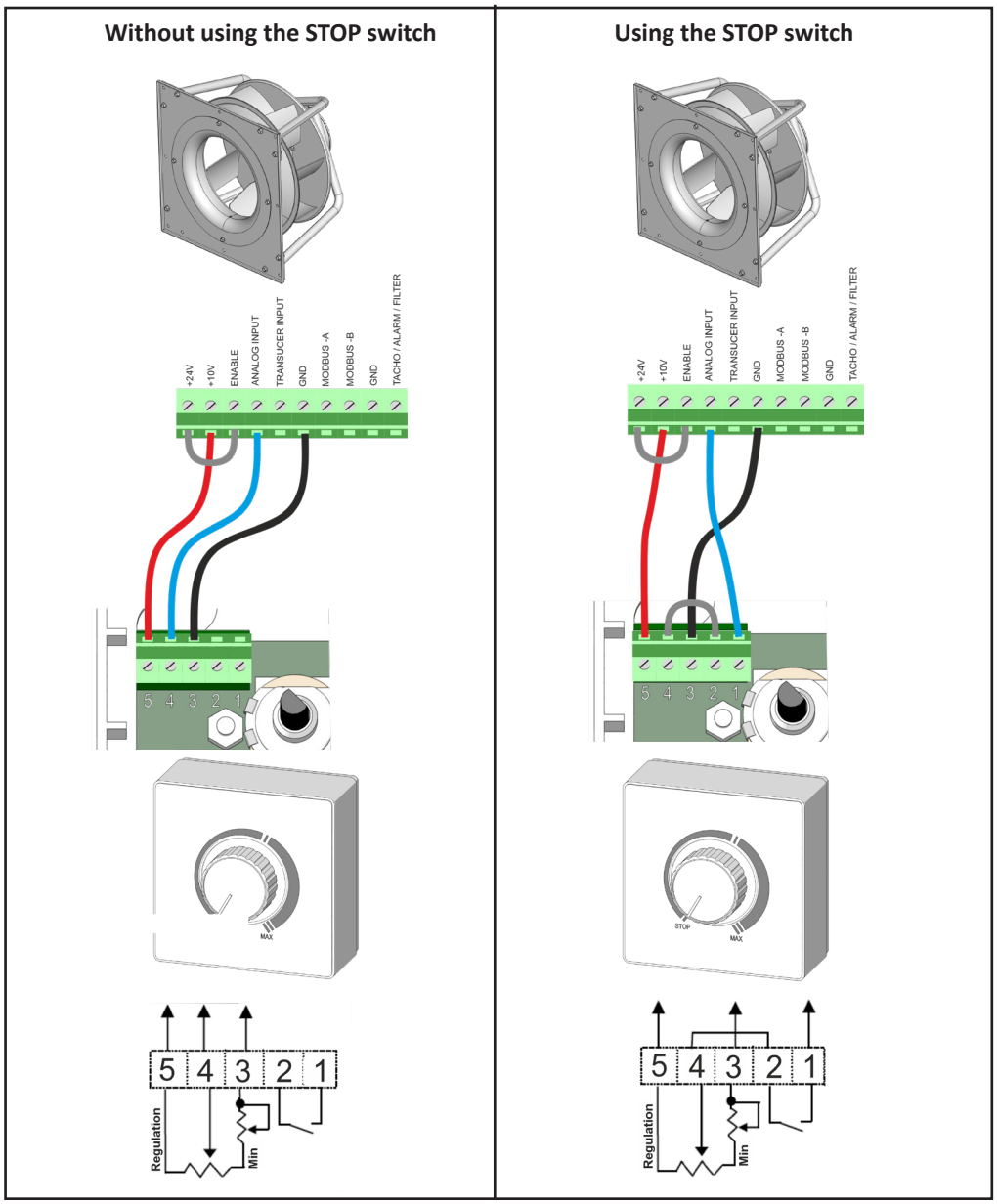

If two or more fans are installed in the same compartment and operated in parallel, the fans must start and stop at the same time.

An auto-restarting alarm occurs when a fan is forced to run forward (or backward) rotation with a speed higher than 150 rpm.

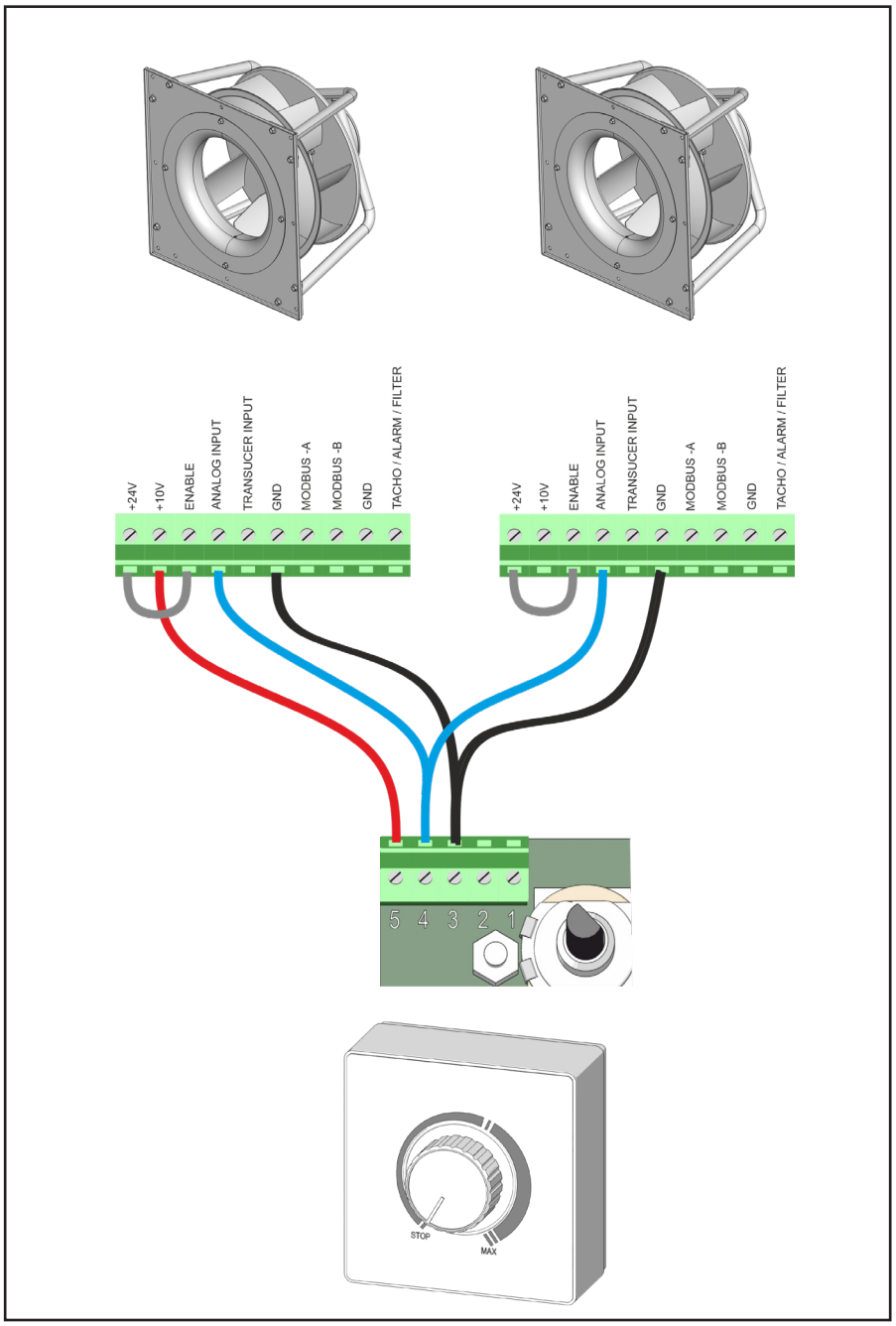

If an ext. 4-20mA device is used, it is necessary to add 0.1% precision resistances between the ANALOG INPUT and GND.
The value of the resistance can range from:
125 Ω -> V_{signal} ranges from 0.5V to 2.5V
to 500 Ω -> V_{signal} ranges from 2V to 10V

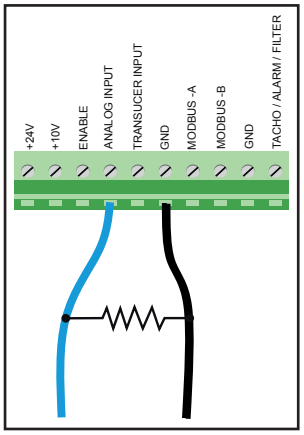

9.6.4.2 Modbus Communication

A Modbus RTU protocol is available on all the fan models.
The line must be connected to MODBUS-A, MODBUS-B and GND pins.
There are two possible Modbus connections:
1) During the fan functioning through any RS-485 serial connection
2) With the driver powered off through an UART serial connection

To connect the driver to a PC during the fan functioning, a USB to 485 converter can be used: K431F8.

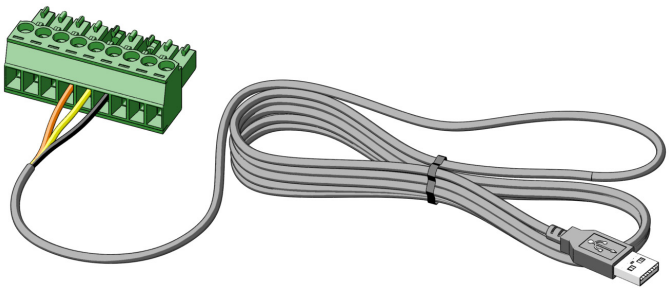

To connect OFFLINE the driver to a PC when the fan is powered off, a USB to UART converter can be used: K431A6 for 1-phase drivers and K431F7 for 3-phase drivers.
A MOLEX connector **"1"** is used to connect the cable to the driver.

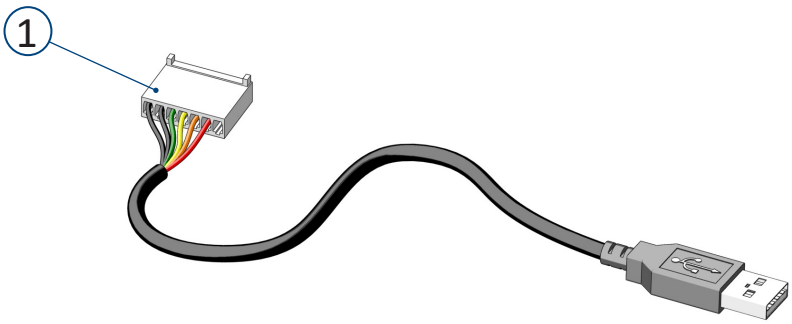

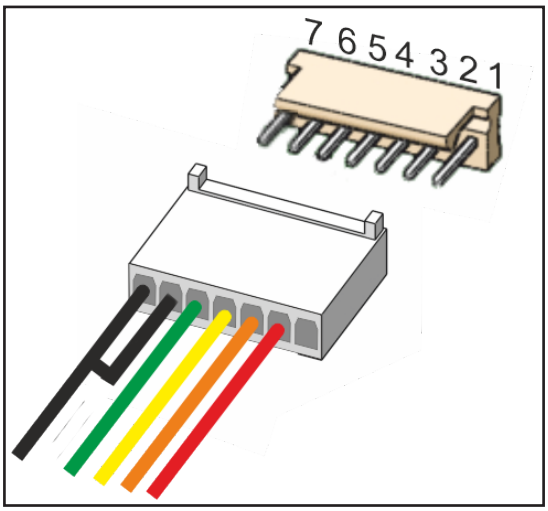

1-phase

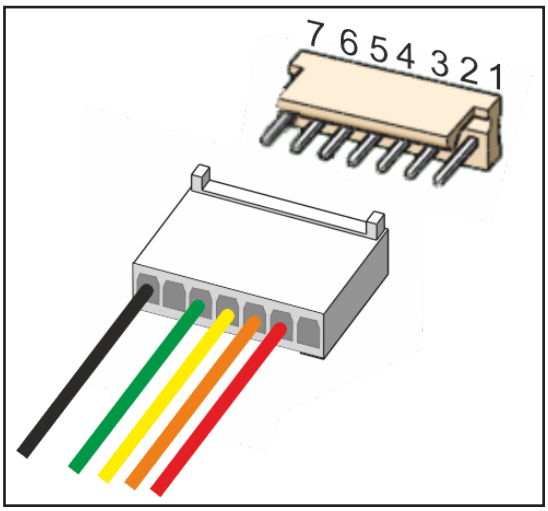

3-phase

Specifications and drivers can be downloaded from Nicotra Gebhardt website: https://www.nicotra-gebhardt.com

9.6.4.3 Enable Signal

The ENABLE signal allows the installation of the Start/Stop switch.
The fan runs when the ENABLE input is connected to the +10V or +24V power supply.

The status of the ENABLE input does not affect the Modbus Temporary modes.

The voltage provided on the "Enable" input is constantly measured in all the driver operating modes, and the value can be read in the Input Register 28.

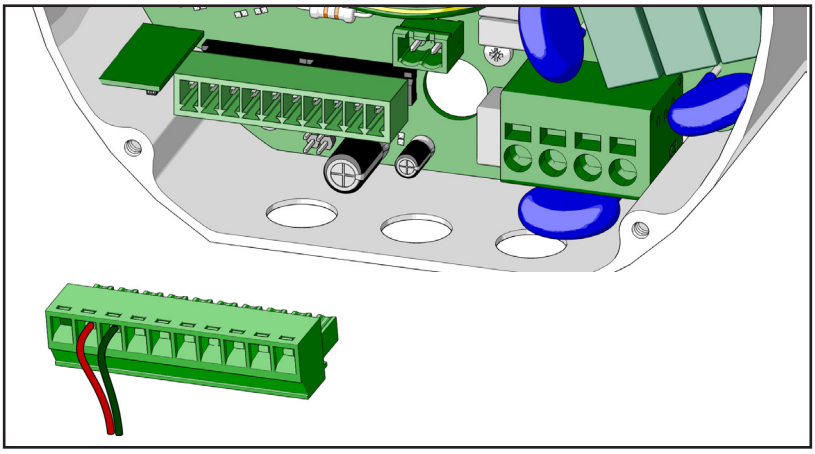

The voltage provided on the Enable input does not affect the four "Modbus - Temporary" modes, where the fan is intended to be completely controlled, including its starting and stopping, via its serial interface.
This voltage is relevant in all the other operating modes: the modes relying on target values stored in fixed registers (Modbus – Fixed values) and the modes where an Analogue Input signal is used, plus the Master/Slave mode.

In those modes which are sensitive to the Enable input, the fan starts only if the voltage on the Enable channel is above 5 V and stops when it's brought to zero. An internal pull-down resistor brings the voltage to zero, if no voltage source is connected to the Enable channel.

This function cannot be disabled by software, but the Enable channel can be permanently connected with a jumper to either one of the internal voltage-sources: 10 V or 24 V.

When the Analogue Input signal is used, the driver needs both the digital input on the Enable channel and a signal higher than 0.5 V on the Analogue-Input channel, to start. In these modes, the fan can be stopped by removing the voltage on the Enable channel, by bringing the Analogue Input voltage below 0.5 V, or both.

If it is not necessary turning on/off the fan with an external switch, a jumper can be inserted between clamps +24V and ENABLE. In case this jumper is not included, the fan will not start.
For further details, refer to par. 14.3.

9.6.4.4 Pressure and flow meter

To provide a constant airflow, the PFP fan is provided with the volumeter pressure probes, which are then connected to transducer K43198 by means of K409A2 piping. This transducer is connected to the PID regulator incorporated into the driver, which is installed on the fan.

For a correct installation, follow the instructions supplied with the single components.

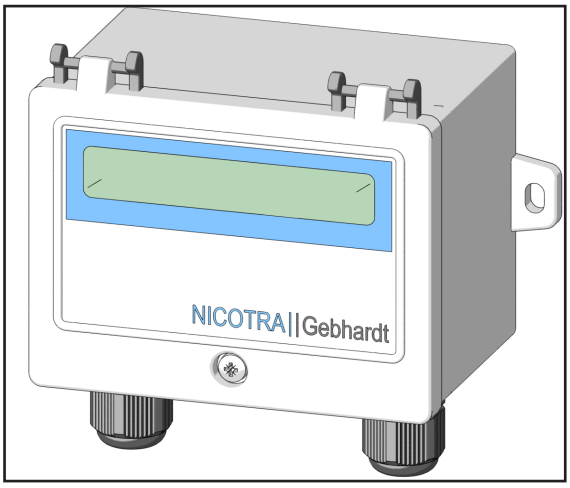

An external transducer can be powered and connected to the driver.
There are two possible connections depending on the kind of transducer used:
1) Open Control Loop Transducer
2) Closed Control Loop Transducer
Nicotra Gebhardt can provide a Pressure Transducer code K43198.

If the transducer does not have its own control and it supplies a voltage signal [0, +10V] proportional to the measured variable, it is possible to use the tunable PID of the driver.
The signal must be connected to the TRANSDUCER INPUT.

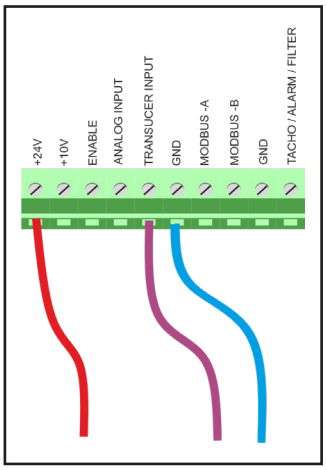

If the transducer has its own PID control, the signal must be connected to the standard ANALOG INPUT.

For details concerning the Volumeter measurement system for the volume flow rate, please refer to paragraph 11.

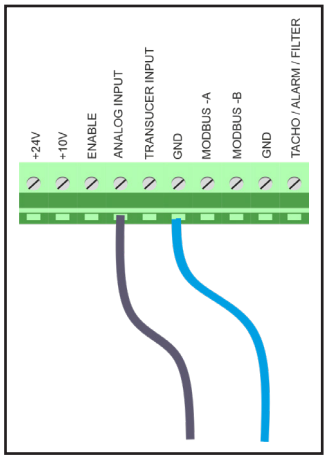

9.6.4.5 +24V AUX Power supply

The +24V output can supply a max current of 50mA and it is able to drive the **Nicotra Gebhardt** pressure transducer (code K43198).
Use an available ground pin on the board for powering devices.

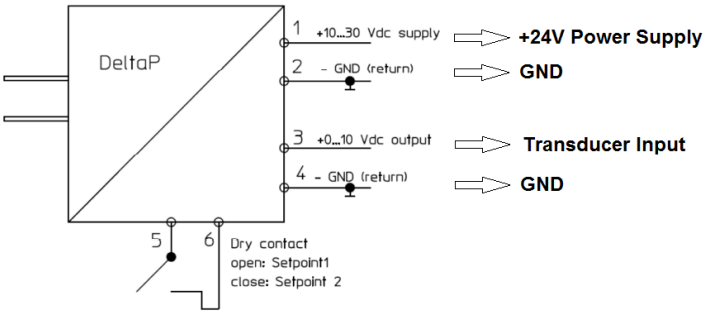

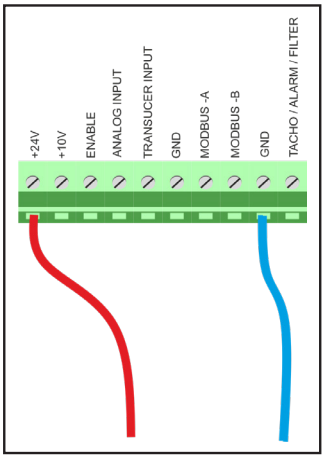

9.6.4.6 Relay (for PFP 3-Ph only)

A relay is available on the Three-Phase drivers.
It is suitable for 250Vac/30Vdc 5A.

When the driver is powered off the relay is open -> the PCB label indicates C-NO.
During the functioning the relay is Normally Closed in No-Alarm condition and open in case of alarm.

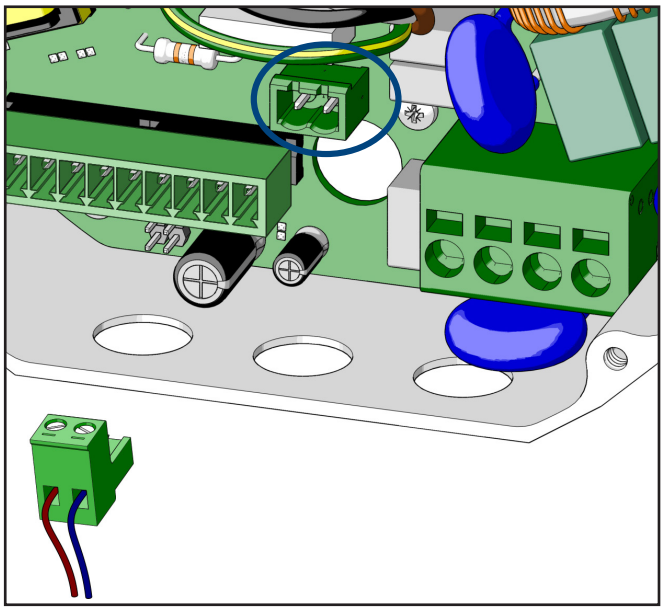

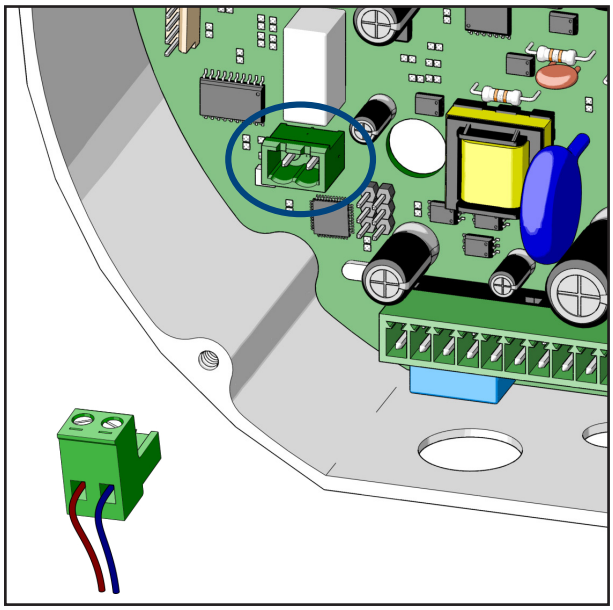

Min. and max. section:

- 0.33 - 2 mm² (22 - 14 AWG) solid or stranded cable.

9.6.4.7 Tachometric, Alarm and Filter Output

The analogue output channel is configured, by default, to provide a PWM tachometric output signal.

The tachometric output is a 0 to 10V PWM waveform at 1KHz.

$$\text{Duty Cycle (Speed)} = 10\% + \frac{90\% \cdot (\text{Speed}_{\text{Real}} - \text{Speed}_{\text{min}})}{\text{Speed}_{\text{MAX}} - \text{Speed}_{\text{min}}}$$

when the speed is equal or higher than the speed min and it is 0% when the speed is lower. The device reading the output must be connected to TACHO\ ALARM\FILTER pin and GND.
The max current supplied of the output is 0.2mA.

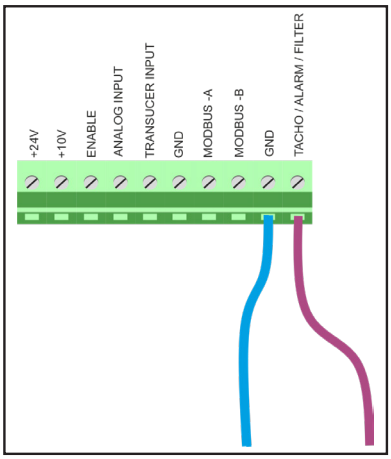

Remember that the $\text{Speed}_{\text{Real}}$ is 0 whenever the required speed is lower than $\text{Speed}_{\text{min}}$ unless the fan is in the dragging phase.

The same analogue output channel can be reconfigured, by changing the value in Holding Register 46 (see paragraph 18.3 at page 41), as a Digital Alarm Output (refer to chapter 19 and paragraph 19.4), or in one of the alternative alarm modes described in paragraphs 12.1 and 12.2.

9.6.4.8 Input Impedances

Input Impedances		Feature available on
ANALOG INPUT	20 kΩ	PFP 1.35 kW 1-Phase
ENABLE ANALOG INPUT TRANSDUCER INPUT	200 kΩ	PFP 2.65 kW 3-Phase PFP 4 kW 3-Phase PFP 5.5 kW 3-Phase

10. OPERATING MODES AND SETTING OPTIONS

Depending on the fan model, there are 4 possible **Operating Modes** and for each mode 3 possible **Setting Options**.

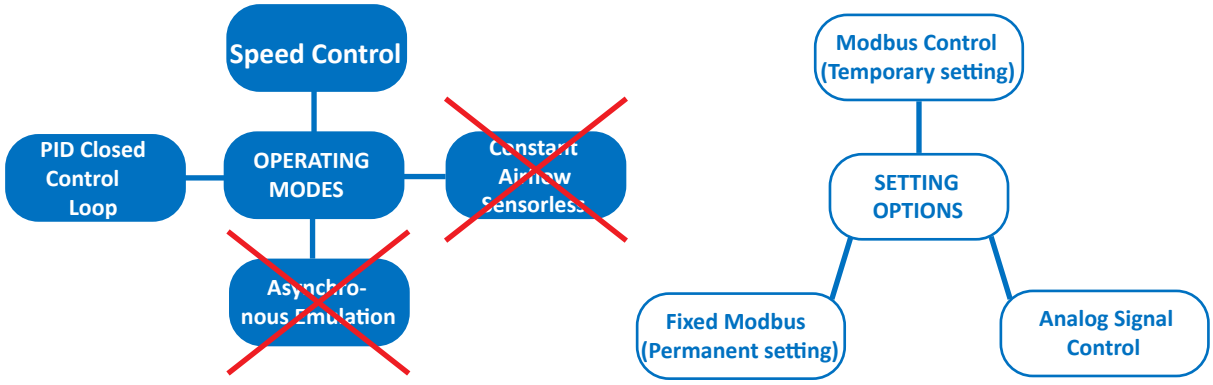

WARNING

The operating mode "Constant Airflow" is not available for PFPs. Setting the fan in one of the three Constant Airflow modes could make it turn in an unknown and/or uncontrollable manner.

The algorithm related to the operating mode "Asynchronous Emulation" does not produce significant differences on PFPs in comparison to the operating mode "Speed control". Therefore, its use is not recommended.

The operating modes and the setting options can be chosen by modifying the INPUT TYPE **Holding Register 34**.

10.1 Speed control

10.1.1 Analog speed control

(INPUT TYPE = 1 Default factory setting)
Through this setting the fan speed is proportional to the analog voltage input. The fan speed is limited by the Safe Operating Area, therefore, depending on the fan working point, the fan could be no more able to increase the speed coherently to the set voltage value.
To avoid the loss of signal dynamic, a speed limit rescaling is necessary by modifying the value of the Max Speed **Holding Register 2**. It is also possible to rescale the min Speed by modifying the **Holding Register 1**.
The analog signal can be read from the **Input Register 14**.

For more details refer to the ANNEX -> Analog Signal Considerations.

The MAX and min speed default values are in function of the fan sizes.

The minimum speed holding register cannot be modified for 1.35kW 1-Ph.

The relationship between control voltage and fan speed is described in paragraph 10.1.4 and, with more detail, in chapter 1 of the Technical Annex to this manual.

10.1.2 Modbus temporary speed control

(INPUT TYPE = 0)
Through this setting the fan runs at the speed defined by modifying the **Holding Register 66**.
The setting is maintained meanwhile the fan is powered on and it is lost when the fan is powered off.

10.1.3 Modbus fixed speed control

(INPUT TYPE = 2)
Through this setting the fan runs at the speed defined by modifying the **Holding Register 21**.
The setting is permanent and fan starts at the defined speed each time it is powered on.

10.1.4 Speed control curves: example

The following figures show a set of performance curves at different speed settings limited by the fan max working limit curve (see paragraph 1.6).

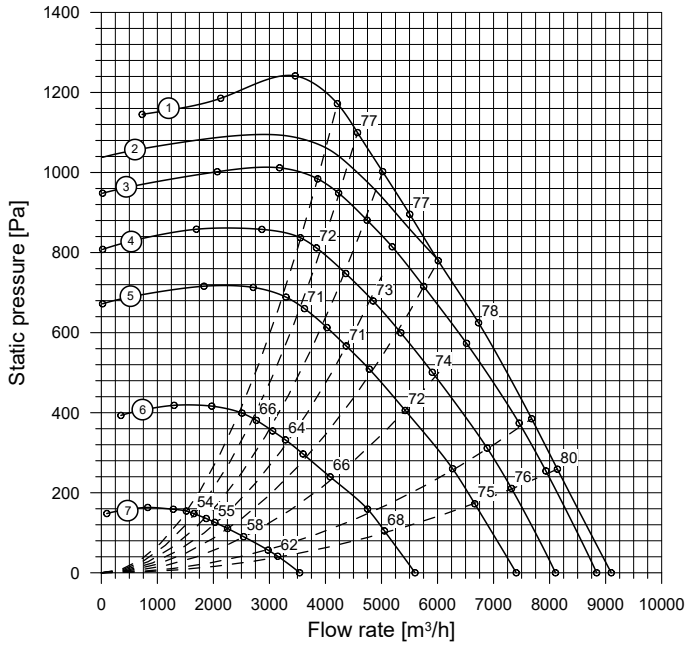

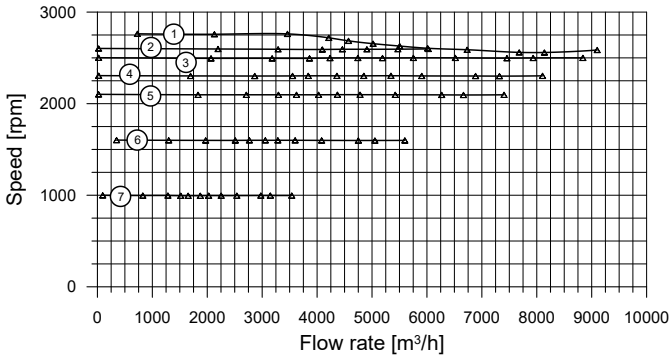

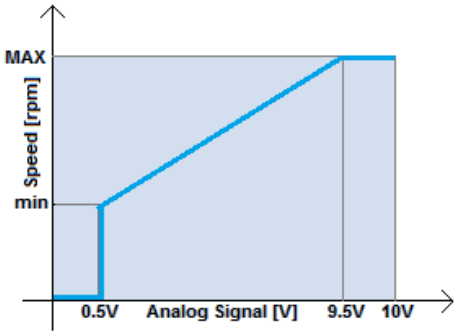

10.2 Constant airflow

This operating mode is not available for PFPs. For further details, see the related warning in par. 18.3.

10.3 Asynchronous emulation

This operating mode is not available for PFPs. For further details, see the related note in par. 18.3.

10.4 PID closed control loop

Through this setting the fan can work in a PID closed control loop where the measured process variable is connected to the TRANSDUCER INPUT that can be monitored through the **Input Register 31**.
and it must be in the range of [0,10V]. The PID mode can be therefore used with temperature probes, pressure transducer, CO/CO2 detectors, etc.

The parameters to set are:
- K_P = Proportional Gain -> **Holding Register 51**
- K_I = Integral Gain -> **Holding Register 52**
- K_D = Derivative Gain -> **Holding Register 53**
- Time = T_{PID} -> **Holding Register 54**

The following equations represent the simplified PID code:

$$E_{rror}(n) = (R_{eference} - M_{easure})$$

$$P_{roportional} = K_P \cdot E_{rror}(n)$$

$$I_{ntegral}(n) = I_{ntegral}(n-1) + K_I \cdot E_{rror}(n) \cdot T_{PID}$$

$$D_{erivative} = \frac{K_D \cdot (E_{rror}(n) - E_{rror}(n-1))}{T_{PID}}$$

$$E_{rror}(n-1) = E_{rror}(n)$$

$$I_{ntegral}(n-1) = I_{ntegral}(n)$$

$$C_{ontrol} = P_{roportional} + I_{ntegral}(n) + D_{erivative}$$

Chapter 5 of the technical Annex to this manual describes a practical procedure to calibrate the PID constants, to achieve stable operation of the closed-loop PID control system.

As an alternative, the Nicotra Gebhardt Fan Configurator software for PC is also including an automatic procedure to calibrate the PID controller. In many cases, this software function can save the user from a lengthy manual calibration procedure. For further information, refer to the Fan Configurator manual.

10.4.1 Analog ref. PID closed control loop

(INPUT TYPE = 10)
In this mode the PID reference is given by the analog signal present at the ANALOG INPUT that can be monitored through the **Input Register 29**.

10.4.2 Modbus temporary ref. PID closed control loop

(INPUT TYPE = 11)
In this mode the PID reference is defined by modifying the **Holding Register 66**.
The value of the reference is expressed in steps of 0.1 Volt (therefore the register ranges from 0 to 100) The PID error is calculated in the following way:

Error = ($Modbus_{REG_66}$ - $ANALOG_{Input}$)

10.4.3 Modbus fixed ref. PID closed control loop

(INPUT TYPE = 11)
In this mode the PID reference is defined by modifying the **Holding Register 50**.
The value of the reference is expressed in steps of 0.1 Volt (therefore the register ranges from 0 to 100) The PID error is calculated in the following way:

Error = ($Modbus_{REG_50}$ - $ANALOG_{Input}$)

10.4.4 Modbus positive/negative feedback

Depending on the application it could be necessary to invert the feedback behavior.
Through the **Holding Register 31** it is possible to multiply by -1 the PID error.

When the register is set to 0 -> Error = ($R_{eference}$ - M_{easure});
When the register is set to 1 -> Error = (M_{easure} - $R_{eference}$).

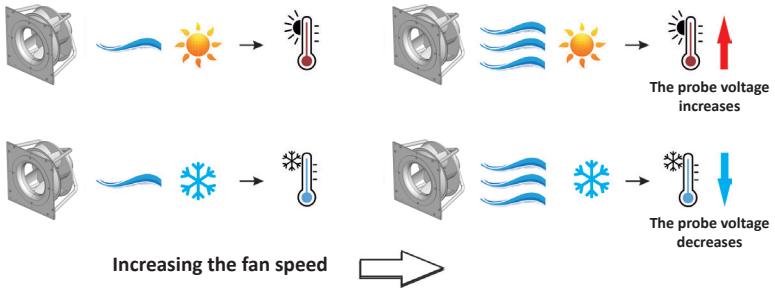

10.5 Changing the operation mode

Here are shown the actions passing from one operation mode to another one.

ACTION	ACTIONS A	ACTIONS B
Temporary Setting -> Fixed Setting	The fan must follow the target corresponding to the value stored the related register.	Fan is put in stop mode and after the data are saved the fan follows the target corresponding to the value stored into the related register.
Fixed Setting -> Temporary Setting	The fan must stop waiting for a new register 66 value.	The fan must stop waiting for a new register 66 value.
Temporary Setting -> Analog Signal	The fan must follow the target corresponding to the analog value at the inputs.	Fan is put in stop mode and after the data are saved the fan follows the target corresponding to the analog value.
Analog Signal -> Temporary Setting	The fan must stop waiting for a new register 66 value.	The fan must stop waiting for a new register 66 value.
Fixed Setting -> Analog Signal	The fan must follow the target corresponding to the analog value at the inputs.	Fan is put in stop mode and after the data are saved the fan follows the target corresponding to the analog value.
Analog Signal -> Fixed Setting	The fan must follow the target corresponding to the value stored the related register.	Fan is put in stop mode and after the data are saved the fan follows the target corresponding to the value stored into the related register.

11. VOLUMETER MEASUREMENT SYSTEM FOR VOLUME FLOW RATE

11.1 General description of the system

The Volumeter system is a measurement device for the volume flow rate of an operating fan.

A correct and easy measurement of the fan volume flow can satisfy a variety of requirements, from acceptance testing of a new plant, at start-up time, to the automatic control of complex systems.

The Volumeter system differs from other measurement devices, like Wilson grids and Venturi-meters, because it does not need a long, regular-section piece of straight duct. It can be easily integrated in the structure of a standard A.H.U. without special modifications.

A complete Volumeter system is made of two parts:

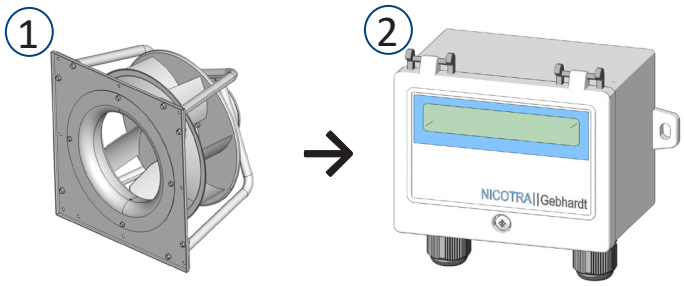

1) A modified fan, with special pressure probes located on each inlet nozzle.

2) A Pressure Transducer code K43198, located close to the fan and connected with pipes to the fan and with an electrical cable to a dedicated display (as shown in the following scheme).

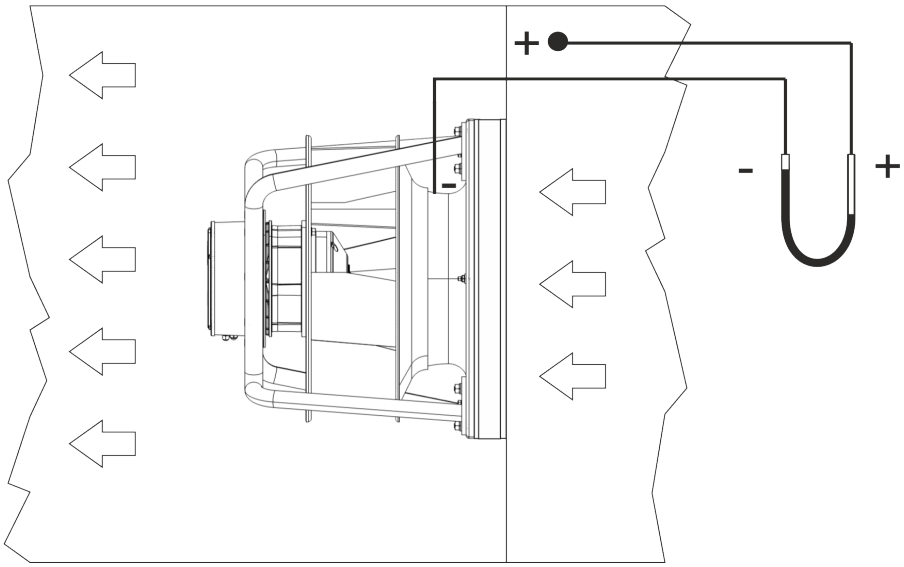

The Volumeter device is based on the Venturi principle, sensing the suction which is produced, in the throat section of the fan inlet nozzle or bell-mouth, by the airflow entering the fan.

The achievable precision from a complete and appropriately calibrated system (+/-5%) corresponds to the level of precision normally required for industrial measurements on a running plant.

11.2 How to calculate volume flow rate from pressure probe

The following analytical equations show how to calculate the value of the volume flow rate from the value of the probe pressure *Δp* and vice versa. Values of *Δp* are given in Pa, while values of flow rate *Q* are expressed in m³/h.

Analytical expression to determine flow rate values from the pressure values, which can be read on the pressure-probe transducer:

$$Q = C \cdot \sqrt{\frac{1.2}{\rho}} \cdot \sqrt{\Delta p}$$

where:
Q = volume flow rate [m³/h]
Δp = pressure value, read on the manometer [Pa]
ρ = air density [kg·m-3] (1.2 at 20°C, 50% r.h. and 1013.2 hPa)
C = dimensional constant, from the following table on this page.

Analytical expression to predict pressure probe manometer readings from the corresponding flow rate values:

$$\Delta p = \frac{\rho}{1.2} \cdot \left(\frac{Q}{C}\right)^2$$

where:
Q = volume flow rate [m³/h]
Δp = pressure value, read on the manometer [Pa]
ρ = air density [kg·m-3] (1.2 at 20°C, 50% r.h. and 1013.2 hPa)
C = dimensional constant, from the following table on this page.

The K value to be inserted inside the device is:

$$K = C \cdot \sqrt{\frac{1.2}{\rho}}$$

As you can see, if the measurement is taken at standard air density, the square root assumes a unit value and K = C.

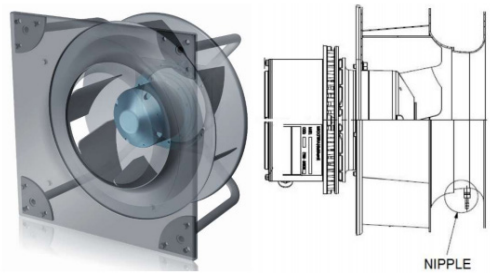

The Probe Calibration Constant C has different values, according to the fan type and size, as shown in the following table:

PFP	C_{PFP}
PFP_280	84
PFP_315	107
PFP_355	134
PFP_400	170
PFP_450	218

PFP	C_{PFP}
PFP_500	268
PFP_560	336
PFP_630	425
PFP_710	540

12. OTHER FEATURES

12.1 Filter alarm

This feature is useful when the speed of the fan is not directly set by the user as fans set in Constant Airflow Asynchronous Emulation or PID mode.
The alarm is active when a speed threshold is overtaken (5V or 10V depending on the fan model).

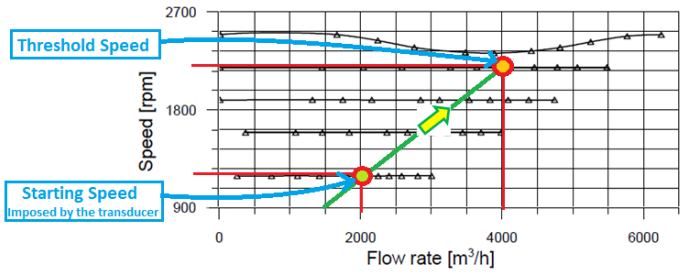

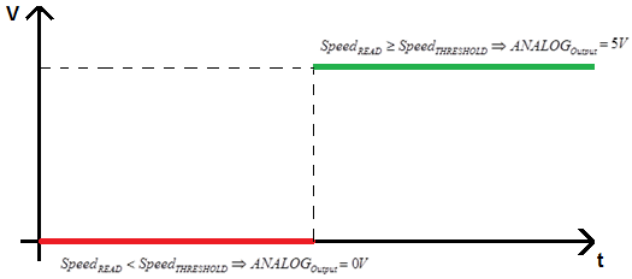

To activate this feature, the **Holding Register 46** must be set at value 2 and the required Speed Threshold value must be set into the **Holding Register 55**. The digital output of the driver changes its status (see above figure).

12.2 Change of limits

The Min Speed values set as default are higher than the possible values that can be introduced in this register. Two limitations are active for this register:

1. Abolute minimum speed (Hardcoded)
   The absolute minimum value that can be set in this register is 10 rpm.

2. Minimum Speed=2 x Min rpm stp (Holding Register 22 - not changeable by users)

It is suggested to set values equals or higher than the minimum speed default setting. The accelerations and decelerations chosen values are also related to the behaviour of the fan at the minimum speed set. Heavy changes could trigger overvoltage alarms.

12.3 Out of functioning range alarm

This feature is not available for PFPs.

12.4 Flying start [for 3-phase only]

The algorithm can catch the position of the rotor after changing the target speed to 0 and to a new value in short time. If too long time passed and the fan runs at very low speed, it is not possible to catch the speed: the fan brakes and restarts.

12.5 Regeneration [for 3-phase only]

The algorithm can catch the position of the rotor after powering OFF and then ON the fan. If too long time passed and the fan runs at very low speed it is not possible to catch the speed and the fan brakes and restarts.

12.6 Skip speed Range [for 3-phase only]

This feature allows to skip the resonance frequencies of the fan installation. To activate this feature the Holding Register 32 must be set at the desired Avoid Range Start and the **Holding Register 33** the desired Avoid Range End.

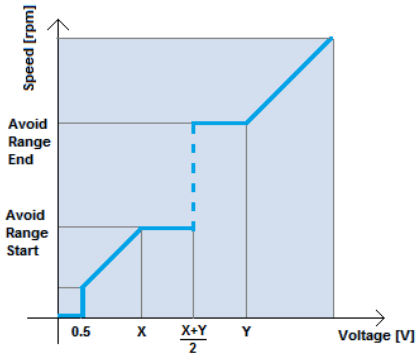

$$Speed_{SET} \leq \frac{AR_{Start} - AR_{End}}{2} \Rightarrow Speed_{target} = AR_{Start}$$

$$Speed_{SET} > \frac{AR_{Start} - AR_{End}}{2} \Rightarrow Speed_{target} = AR_{End}$$

This function should be avoided when used in close control loops application or unstable conditions of the fan could occur.

12.7 Soft start

In the following paragraph the starting phase of a fan is shown.

- The first phase when the fan receives a command to start running is the ALIGNMENT. During this phase the driver aligns the rotor.
- The second phase is the dragging phase, where the fan gradually increases its speed to the minimum in open loop. In this phase the current and speed values present in the Input Register can't be taken in consideration.
- The last phase is the closed loop where the sensorless control is active and from the minimum speed to the target speed the fan accelerates with different ramps basing on the fan size and the wheel inertia. The acceleration and deceleration values are different and to avoid overvoltage alarm or loss of synchronism alarm, the deceleration is always lower.

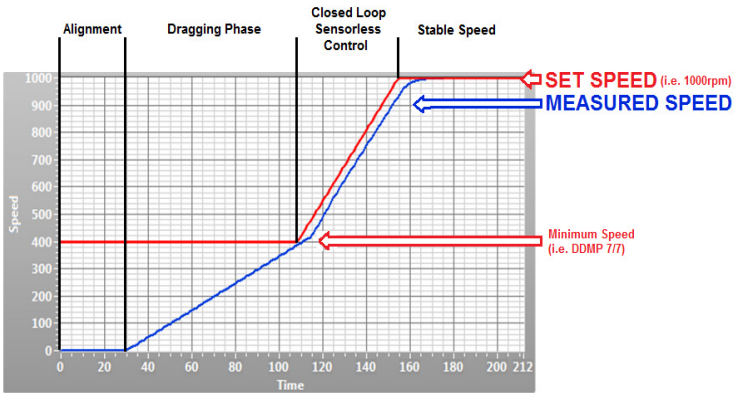

During the ALIGNMENT and DRAGGING phases a Loss of Synchronism alarm could occur if there is a condition of wrong rotor starting position or wrong position estimation during the open loop phase. This is not a blocking alarm; therefore the fan stops and auto-restarts after few seconds.

12.8 Starting in Closed-loop torque control [for 5.5 kW drivers only]

Unlike the less powerful drivers, the 5.5 kW drivers start the motor under closed-loop torque control from 0 rpm upwards.
If the rotor of the motor encounters some unexpected resistance to rotation, the driver increases gradually the current until the motor can start correctly.

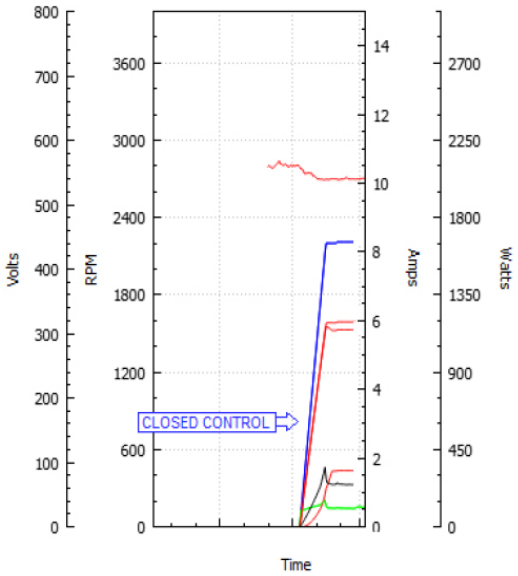

12.9 Stop speed [for 5.5 kW drivers only]

When the fan speed is set to 0 rpm and the value of “Stop Speed” is

0<Stop Speed<Max Speed,

then the fan decelerates gradually down to the Stop Speed and then the fan is left coasting to stop.

If the value of “Stop Speed” is

Stop Speed>>Max Speed (default configuration)
then the controlled deceleration is de-activated, and whenever the speed is reduced the fan is left coasting down to the required speed or to stand-still.

If the value of “Stop Speed” is “0” and the set speed is also “0”, then the fan impeller is decelerated to stand-still and then kept braked.

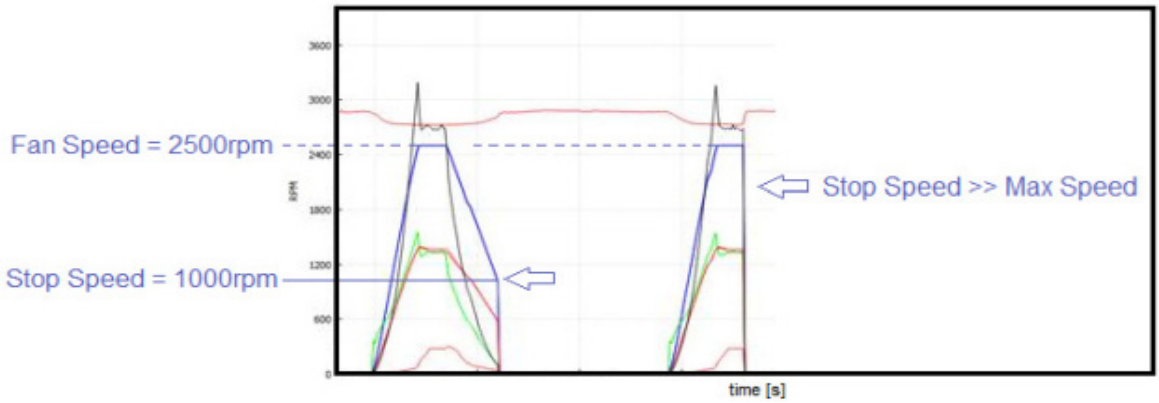

12.10 Locked rotor [for 5.5 kW drivers only]

In case of completely locked rotor, the current injected could damage the motor if it lasts for long and if the alarm is repeated indefinitely.

The Loss of Synchronism alarm is repeated for a number of times defined by the "**Num Failures Sync**" Holding Regioster 57 (not changeable by users).
Once the max trials are reached, the alarm becomes blocking.
If the fan can restart and can run for one minute before the max number is reached, the counter is reset.

For further information about the Loss of Synchronism, see paragraph 19.2.

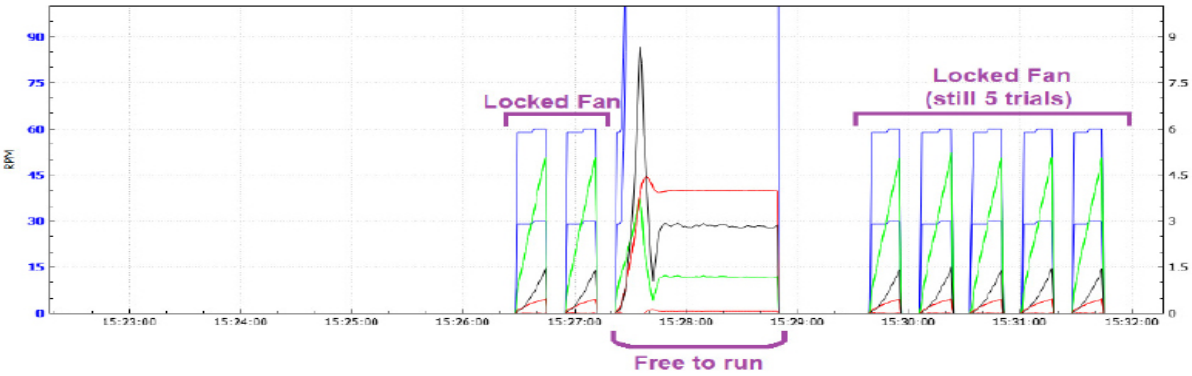

13. SAFE OPERATING AREA LIMITATIONS

13.1 Speed limitation

The speed limits can be adjusted for the signal rescaling, but also to limit the noise in the final application. The **Input Register 2** indicates the Speed Reference (minimum speed during alignment and dragging and the Set Speed in Closed Control Loop). The **Input Register 3** indicates the Measured Speed.

13.2 Power limitation

The driver is set by factory default to the max achievable electrical input power to the driver depending on the model. During the functioning it is possible to monitor the power absorption by reading the **Input Register 31**. If for some application it is necessary to keep the absorption of the fan below a defined power value, it is possible to reduce the max power out by modifying the **Holding Register 36**.

13.3 Output current limitation

The drivers are set by factory default to the max peak current out that changes depending on the motor windings characteristics.
During the functioning it is possible to read the peak current to the motor by reading the **Input Register 12**.
It is possible to reduce the motor current by modifying the **Holding Register 7**. It is suggested to keep the motor current above 3500mA.

13.4 Input current limitation [for 1-phase only]

Only the PFP single Phase has an input current limit of 5.9A. At 230V the driver can supply a power output of 1350W. Decreasing the input voltage, a derating occurs both for input and output current:

$P_{In} = V_{PowerSupply} \cdot I_{InputCurent}$ and $P_{Out} = P_{In} \cdot \eta_{fan}$

During the functioning it is possible to monitor the input current by reading the **Input Register 32**.

14. OTHER VARIABLES

There are other variables that can be monitored for a safe use of the fan.

14.1 Bus voltage

The BUS voltage is the DC voltage on the bus capacitors. The driver is continuously monitoring this voltage and will stop the motor in the event of under-voltage or over-voltage.
The value can be monitored through the **Input Register 9**.

14.2 Motor voltage

The motor voltage is the peak value of the phase voltage module. To know the rms line to line value, it must be multiplied by √3/2.
The value can be monitored through the **Input Register 13**.

14.3 Enable Function

A safety enable function is available and it is active for the Operating Modes in the following table.
The value can be monitored through the **Input Register 28**.

Input type	Enable function
0	Not active
1	Active
2	Active
3	Active
4	Active[1]
5	Not active[1]
6	Active[1]

Input type	Enable function
7	Active[2]
8	Not active[2]
9	Active[2]
10	Active
11	Not active
12	Active

(1) WARNING

The operating mode “Constant Airflow” is not available for PFPs. Setting the fan in one of the three Constant Airflow modes could make it turn in an unknown and/or uncontrollable manner.

(2) **The algorithm related to the operating mode "Asynchronous Emulation" does not produce significant differences on PFPs in comparison to the operating mode "Speed control". Therefore, its use is not recommended.**

15. DERATING AND OVERHEATING PROTECTIONS

15.1 Driver overheating: DERATING

When the temperature of the driver components overtakes a defined temperature threshold, the performance is automatically reduced to decrease the heating. It is possible to check in real time the temperature by reading the **Input Register 15**.
If it is not possible to reach a steady thermal equilibrium, the driver shuts down. The protection acts limiting the current to the motor. In this condition the driver goes in alarm (see chapter 18).
Once the temperature on the driver decreases under 75°C, the alarm is automatically reset.

15.2 Motor overheating: THERMAL PROTECTOR

The motor is protected through one or more Thermal Protectors. If the motor temperature is too high, the thermal protector opens one phase and the driver recognizes the error and stops the fan (see chapter 18).

The Motor Winding temperature and the driver derating are dependent on the fan size and on the fan working point. Therefore, it is possible that the fan could work at 50°C without a performance limitation.

WARNING

The Driver and motor areas are rated for operating in a temperature range between -20°C and +40°C. The derating is tested and guaranteed from +40°C to +50°C.
Higher temperatures could damage the motor winding or the performance could be significantly reduced.

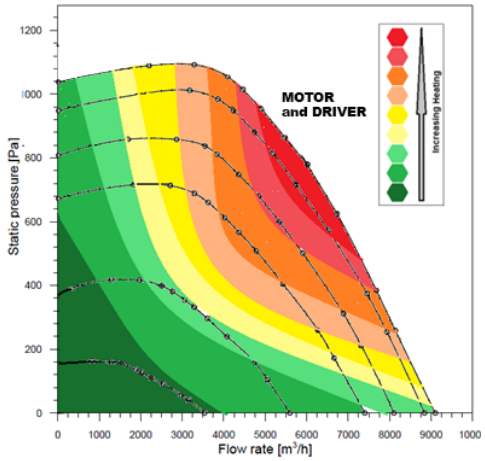

16. MASTER & SLAVE MODE

A Master & Slave connection is necessary when the fans have to operate in parallel and in any Constant-Airflow mode, or under control of the internal PID regulator. Having two or more fans self-controlling independently, while operating in parallel, can make the system unstable. A Master & Slave connection is neither needed nor recommended when the fans in parallel are runnig in any speed-control mode, even if under control of a common external PID regulator.

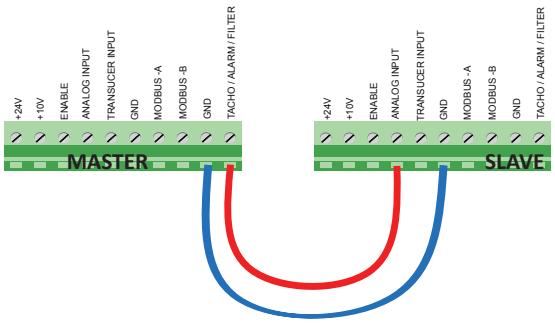

16.1 Master and Slave 0-5V PWM out

This feature is not available for PFPs.

16.2 Master and Slave 0-10V PWM out

The drivers can be connected in master & slave mode more easily. These drivers have a tachometric output ranging from 0 to 10 V.
The master can have any possible configuration, while the slave must be configured in Analog Speed Control only.
The MASTER must have the **Holding Register 46** set at 0 = TACHO.

17. VARIABLE SWITCHING FREQUENCY (for 3-phase - 4 kW and 5.5 kW)

This feature is used to increase the efficiency and to decrease the heating of the fan. At slow fan speed the driver switching frequency is set at its maximum value 14kHz, while at high speed, the switching frequency is reduced to 8kHz. In this situation the noise generated by the lower switching frequency is covered by the higher fan noise.

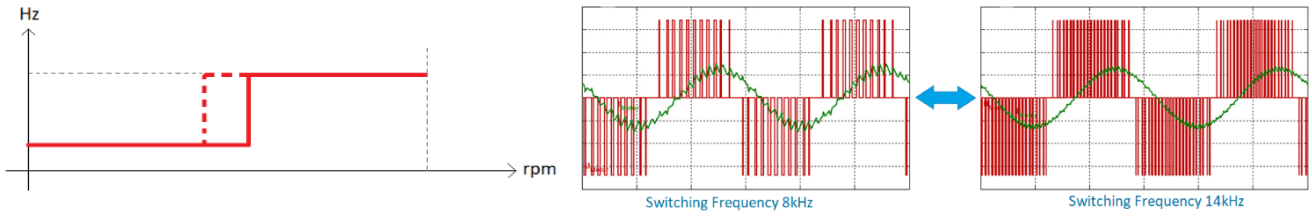

18. COMMUNICATION

When trying to enter a value in any holding register, the value is not overwritten if the new value is outside the load boundaries.

The value of the Holding Registers is NOT coerced if trying to set a not allowed value.

Protocol interface:
MODBUS RTU (RS485 or Bluetooth)

Baud rate
The baud rate can be set through the **Holding Register 47** and the possible speeds are:
RS-485 CABLE: 9.6kbps and 19.2kbps (higher speeds are not allowed due to the board Opto-Insulators)
UART OFFLINE CABLE: 57.6kbps.

Parity and Stop bits
The parity and the stop bits can be chosen by modifying the **Holding Register 48** and the possible choices are:

0	No parity, 2 Stop Bits (default)
1	Odd parity, 1 Stop Bit
2	Even parity, 1 Stop Bit

Supported Functions:

03	Read Holding Registers
04	Read Input Registers
06	Write Single Holding Register

On the Holding Registers the drivers accept Write commands being sent while the motor is running. The register changes are immediately effective on the microcontroller, but the new values are not written in the permanent memory of the driver. If the power supply is switched off, the new values are lost and the driver restarts with the formerly-memorized values. To permanently modify the register settings, any new values in the Holding Registers must be written while the fan is stopped.

Modbus Communication Timeout
With this feature it is possible to stop the fan when the communication is lost, after a period of time set in the **Holding Register 56**. The register can be set to:

0	No Communication Timeout
1 to 32767	Time expressed in seconds, therefore it is possible to set from 1sec to 9h 6m 8 sec

Modbus Address
The slave device address can be changed from value 1 to 247 by modifying the **Holding Register 45**.
The default address from factory configuration is 1.

Broadcast Address
The Broadcast address is 0.

RS-485 Default Communication Parameters

	1-Phase	3-Phase		
	1.35kW	2.65kW	4kW	5.5 kW
Baud rate	9600	9600	9600	9600
Parity and Stop Bits	0	0	0	0
Modbus Address	1	1	1	1

UART (OFFLINE) Default Communication Parameters

	1-Phase	3-Phase		
	1.35kW	2.65kW	4kW	5.5kW
Baud rate	57600	57600	57600	57600
Parity and Stop Bits	0	0	0	0
Modbus Address	1	1	1	1

Changing the Baud-rate has an immediate effect, while the other communication parameters require the complete fan power off and consequently power on (wait until the complete discharge of the capacitors and the led turning off, otherwise the changes are not written into the EEPROM).

The Modbus communication parameters (Baud-rate, parity and stop-bits) used for the UART port are fixed on all the PFP drivers. The values in the Holding Registers 47 and 48 apply only to the communication via the RS485 port.

18.1 Temporary holding register

The **Holding Register 66** is a special register used in each operating mode for setting the speed, the airflow, the slip and the PID reference.
It is not a physical register and it can be written, but it is not possible to read its value. The setting remains active until the fan is powered on.

If the fan is powered off but there is a residual charge, the microcontroller of the driver is still functioning. Therefore, if it is powered on in this situation the value set through the register 66 is still active.

18.2 Fixed holding register

The drivers Holding Registers permanently stored into the EEPROM are 64, but only 26 registers are modifiable by the end user (see the table in the following page).
The most important **Holding Register 34** is the **Input Type** related to the selection of the Operating Mode.

0	Reset	P. 43
1	Min Speed	P. 43
2	Max Speed	P. 44
7	Max Current	P. 44
21	Fixed Speed Setting	P. 44
31	PID positive/negative	P. 44
32	Avoid Range Start	P. 45
33	Avoid Range End	P. 45
34	Input Type	P. 45
35	Stop Speed	P. 45
36	Max Power Out	P. 46

45	Modbus Address	P. 46
46	Tacho\Alarm\Filter	P. 46
47	Modbus Baud rate	P. 46
48	Modbus Parity and Stop Bits	P. 47
50	External PID Setting	P. 47
51	PID Kp	P. 47
52	PID Ki	P. 47
53	PID Kd	P. 47
54	PID Time	P. 47
55	Speed Threshold	P. 48
56	Communication Timeout	P. 48

18.3 Holding register description

⚠ WARNING

Do not set the values outside the indicated limits, the driver could stop working without any alarm indication, it could be reset or work in an undefined condition.

If the below reported "Allowed values" are written between square brackets, they must be read as "maximum" and "minimum".

18.3.1 Holding Register 0

Holding Register 0: **RESET [Adim]**
This register can be used to reset the fan by writing the value 1 on it. This register automatically returns to value 0 after being reset. The driver will reset any error condition and it will try to restart.

Allowed values = 0 and 1	**Default value** = 0

18.3.2 Holding Register 1

Holding Register 1: **Min Speed [RPM]**
This register is used to set the minimum speed of the fan.

Allowed values = [Default Value, Max Speed]	**Default value** = table below

		280-A	315-A	355-A	400-A	450-A	450-B/-C	500-A	500-B/-C	560-A	500-B/-C	630-A	710-A
1.35kW	**1-Phase**	500	400	400	300	300	-	300	-	-	-	-	-
2.65kW	**3-Phase**	300	300	150	150	150	-	-	-	-	-	-	-
4kW	**3-Phase**	-	-	-	-	300	-	300	-	300	-	300	-
5.5kW	**3-Phase**	-	-	-	-	-	250	-	250	-	250	300	300

18.3.2 Holding Register 2

Holding Register 2: **Max Speed [RPM]**
This register can be used to set the max speed of the fan.

Allowed values = [Min Speed, Default Value]	**Default value** = table below

		280-A	315-A	355-A	400-A	450-A	450-B	450-C	500-A	500-B	500-C	560-A	560-B	560-C	630-A	710-A
1.35kW	**1-Ph.**	3350	2890	2500	2000	168	-	-	1425	-	-	-	-	-	-	-
2.65kW	**3-Ph.**	3350	2890	2680	2480	1950	-	-	-	-	-	-	-	-	-	-
4kW	**3-Ph.**	-	-	-	-	2030	-	-	1900	-	-	1620	-	-	1230	-
5.5kW	**3-Ph.**	-	-	-	-	-	2770	2350	-	2500	2100	-	2060	1850	1460	1200

18.3.3 Holding Register 7

Holding Register 7: **Max Current [mA]**
This register can be used to reduce the max motor current.

Allowed values = [1, Default value]	**Default value** = table below

Although the value of the Max Current can be set at any value being lower than the original default one, it is not recommended using a value that is 0.3 times below the default one.

		280-A	315-A	355-A	400-A	450-A	450-B	450-C	500-A	500-B	500-C	560-A	560-B	560-C	630-A	710-A
1.35kW	**1-Ph.**	6000	6500	6500	6500	6500	-	-	6500	-	-	-	-	-	-	
2.65kW	**3-Ph.**	4200	5700	6700	8000	6700	-	-	-	-	-	-	-	-	-	
4kW	**3-Ph.**	-	-	-	-	12000	-	-	12000	-	-	12000	-	-	12600	-
5.5kW	**3-Ph.**	-	-	-	-	-	13500	11000	-	13500	11000	-	11700	11700	12600	11000

18.3.4 Holding Register 16

Holding Register 16: **Speed Threshold Low [RPM]**
This register can be used to set the speed threshold low.
The register is active when the **register 46** is set to the value 3.

		450-B	450-C	500-B	500-C	560-B	560-C	630-A	710-A
		-	-	-	-	-	-	-	-
5.5kW	**3-Ph.**	2200	1900	2000	1500	1500	1400	1000	800

18.3.5 Holding Register 21

Holding Register 21: **Fixed Speed setting [RPM]**
This register can be used to set the speed in **Fixed Speed Control Mode**.
The register is active when the Input Type **Holding Register 34** is set to the value 2.

Allowed values = [Min Speed, Max Speed]	**Default value** = 0

18.3.6 Holding Register 31

Holding Register 31: **PID Positive/Negative [Adim]**
This register can be used to invert the feedback behavior of the PID.

Allowed values = 0 and 1	**Default value** = 0

18.3.7 Holding Register 32

Holding Register 32: **Avoid Range Start [RPM]**
This register combined with the Avoid Range End can be used to skip some resonance frequencies of the fan.

Allowed values = [0, Avoid Range End]	**Default value** = 20000

18.3.8 Holding Register 33

Holding Register 33: **Avoid Range End [RPM]**
This register combined with the Avoid Range Start can be used to skip some resonance frequencies of the fan.

Allowed values = [Avoid Range Start, 20000]	**Default value** = 20000

18.3.9 Holding Register 34

Holding Register 34: **Input Type [Adim]**
This register defines all the possible operating modes:

Allowed values = [0,12]	**Default value** = 1

0	Modbus Speed Control	The speed is set by modifying the register 66
1	Analog Speed Control	The speed is set through the analog signal
2	Modbus Fixed Speed Control	The speed is set by modifying the register 21
3	Master&Slave	The fan is configured as slave and follows the master
4	Analog Constant Airflow	The constant airflow is set through the analog signal (1)
5	Modbus Temporary Constant Airflow	The constant airflow is set by modifying the register 66 (1)
6	Modbus Fixed Constant Airflow	The constant airflow is set by modifying the reg. 39 (1)
7	Analog Asynchronous Emulation	The emulation is set through the analog signal (2)
8	Modbus Temporary Asynchronous Emulation	The emulation is set by modifying the register 66 (2)
9	Modbus Fixed Asynchronous Emulation	The emulation is set by modifying the register 30 (2)
10	Analog Ref. PID Closed Control Loop	The PID ref. is set through the analog signal
11	Modbus Temporary Ref. PID Closed Control Loop	The PID ref. is set by modifying the register 66
12	Modbus Fixed Ref. PID Closed Control Loop	The PID ref. is set by modifying the register 50

(1) WARNING

The operating mode "Constant Airflow" is not available for PFPs. Setting the fan in one of the three Constant Airflow modes could make it turn in an unknown and/or uncontrollable manner.

(2) **The algorithm related to the operating mode "Asynchronous Emulation" does not produce significant differences on PFPs in comparison to the operating mode "Speed control". Therefore, its use is not recommended.**

18.3.10 Holding Register 35

Holding Register 35: **Stop Speed**
This register can be used to set the stop speed.
When the fan speed is set to 0 rpm if the 0<Stop Speed<Max Speed, the fan decelerates gradually until the Stop Speed value is reached and then the fan is let in free run.

Allowed values = [0, 20000]	**Default value** = 20000

18.3.11 Holding Register 36

Holding Register 36: **Maximum Power [W]**
This register can be set to reduce the power out to the motor.

Allowed values = [10, Default Value]	**Default value** = table below

		Value
1.35kW	**1-Phase**	1350
2.65kW	**3-Phase**	2650
4kW	**3-Phase**	4100
5.5kW	**3-Phase**	4200-5600*

*The value depends on the type of impeller installed (450-B: 5600; 450-C: 4200; 500-B: 5600: 500-C: 4800; 560-B: 5300; 560-C: 5600; 630-A: 5200; 710-A: 4200).

18.3.12 Holding Register 45

Holding Register 45: **Modbus Address [Adim]**
This register can be used to change the Modbus address of a driver.

Allowed values = [1, 247]	**Default value** = 1

18.3.13 Holding Register 46

Holding Register 46: **Tachometric / Alarm / Threshold [Adim]**
This register can be used to set the digital output function.

Allowed values = table below	**Default value** = 0

The possible settings are:

0	**Tachometric**	The digital output indicates the measured speed through a PWM signal
1	**Alarm**	The digital output indicates when an alarm occurs
2	**Threshold**	The digital output indicates when the speed set in the Holding Register 55 is overtaken
3	**Out of Functioning Range**	The digital output indicates when the fan is working in a defined range of speeds

18.3.14 Holding Register 47

Holding Register 47: **Modbus Speed [10^{-1} kbps]**
This register can be used to set the Modbus speed.

Allowed values = table on the following page	**Default value** = 96

96	corresponding to 9.6kbps
192	corresponding to 19.2kbps

18.3.15 Holding Register 48

Holding Register 48: **Modbus Stop Bits [Adim] (Default = 0)**
This register can be used to set the parity and the stop bits.

Allowed values = table below	**Default value** = 0

0	2 Stop Bits/No Parity
1	1 Stop Bit/Even Parity
2	1 Stop Bit/Odd Parity

18.3.16 Holding Register 50

Holding Register 50: **External Set [10^{-1} V]**
This register can be used to set the reference of the PID control.

Allowed values = [0, 100]	**Default value** = 0

The register is active when the Input Type Holding Register is set to the value 12.

18.3.17 Holding Register 51

Holding Register 51: **Kp [Adim]**
This register can be used to set the Proportional Gain of the PID control.

Allowed values = [0, 32767]	**Default value** = 0

18.3.18 Holding Register 52

Holding Register 52: **Ki [Adim]**
This register can be used to set the Integral Gain of the PID control.

Allowed values = [0, 32767]	**Default value** = 0

18.3.19 Holding Register 53

Holding Register 53: **Kd [Adim]**
This register can be used to set the Derivative Gain of the PID control.

Allowed values = [0, 32767]	**Default value** = 0

18.3.20 Holding Register 54

Holding Register 54: **Period [ms]**
This register can be used to set the time constant of the PID control.

Allowed values = [0, 32767]	**Default value** = 0

18.3.21 Holding Register 55

Holding Register 55: **Speed Threshold (or Speed Threshold HIGH) [RPM]**
This register can be used to set the speed threshold, when the measured speed in the Input Register 3 overtakes the threshold value.

Allowed values = [0, Max Speed]	**Default value** = 0
Allowed values (Functioning Indication mode) = [Speed Threshold Low, Max Speed]	

Speed Threshold =0 means that it is **DEACTIVATED**

18.3.22 Holding Register 56

Holding Register 56: **Communication Timeout [s]**
This register can be used to set a timeout period for the communication.

Allowed values = [0, 9hour 8min 8sec]	**Default value** = 0

At the end of the period set into the register the fan stops and there is an Alarm indication. To restart a reset command must be sent.
Communication Timeout = 0 means that it is **DEACTIVATED**

18.4 Input register description

The Modbus Input Registers are in total 33, but only 14 are useful for the end user.

2	Speed Reference	[rpm]		**15**	Module Temperature	[10^{-1} °C]
3	Measured Speed	[rpm]		**17**	Alarm 2	[Adim]
9	Bus Voltage	[10^{-1}V]		**28**	Enable Input	[$10/2^{16}$ V]
10	Alarm 1	[Adim]		**29**	Analog Input	[$10/2^{16}$ V]
12	Motor Current	[mA]		**30**	Transducer Input	[$10/2^{16}$ V]
13	Motor Voltage	[10^{-1}V]		**31**	Measured Power	[W]
14	Analog Input	[10^{-1}V]		**32**	Input Current	[mA]

Input Register 2: **Speed Reference [rpm]**
This register indicates the speed reference during the functioning. During the starting phase, it is equal to the Min Speed and then gradually increases to the target speed depending on the selected mode.

Input Register 3: **Measured Speed [rpm]**
This register indicates the speed during the functioning.

Input Register 9: **Bus Voltage [10^{-1} V]**
This register indicates the rectified voltage after the PFC stage.

Input Register 10: **Alarm 1 [Adim]**
This register must be combined with the Alarm2 register (see the table in paragraph 18.2)

Input Register 12: **Motor Current [mA]**
This register indicates the peak value of the line current module.
To know the rms value, it must be divided by √2.

Input Register 13: **Motor Voltage [10^{-1} V]**
This register indicates the peak value of the phase voltage module.
To know the rms line to line value, it has to be multiplied by √3/2.

Input Register 14: **Analog Voltage [10^{-1} V]**
This register indicates the analog voltage value present at the input.

Input Register 15: **Module Temperature [10^{-1} °C]**
This register indicates the temperature of the power module of the driver. When the value exceeds the temperature threshold, the driver enters in a derating process where the performances are automatically decreased until a thermal equilibrium below the temperature threshold is reached. If this equilibrium is not reached, the fan stops and an alarm condition is activated. As soon as the heating decreases and the power module temperature is below the temperature threshold, the alarm is automatically reset.
This threshold value can be read in **Holding Register 29**.

Input Register 17: **Alarm 2 [Adim]**
This register must be combined with the Alarm1 register.

Input Register 28: **Enable Input [Adim]**
This input indicates the ENABLE state.
The value must be multiplied by $10V/2^{16}$ to have the corresponding voltage value.

Input Register 29: **Analog Input [Adim]**
This input indicates the Reference Value.
The value must be multiplied by $10V/2^{16}$ to have the corresponding voltage value.

Input Register 30: **Transducer Input [Adim]**
This input indicates the Transducer Value.
The value must be multiplied by $10V/2^{16}$ to have the corresponding voltage value.

Input Register 31: **Measured Power [W]**
This register indicates the absorbed power.

Input Register 32: **Input Current [mA]**
This input indicates the input absorbed current.

18.5 Fan info and Modbus registers

The **Holding Register 44** indicates the fan model.

		280-A	315-A	355-A	400-A	450-A	450-B	450-C	500-A	500-B	500-C	560-A	560-B	560-C	630-A	710-A
1.35kW	**1-Ph.**	1	2	3	4	5	-	-	6	-	-	-	-	-	-	-
2.65kW	**3-Ph.**	1	2	3	4	5	-	-	-	-	-	-	-	-	-	-
4kW	**3-Ph.**	-	-	-	-	1	-	-	2	-	-	3	-	-	4	-
5.5kW	**3-Ph.**	-	-	-	-	-	1	6	-	2	7	-	3	8	4	5

The **Input Register 0** indicates the driver firmware version and the **Input Register 1** indicates the driver model.

	1-Phase	**3-Phase**		
	1.35kW	**2.65kW**	**4kW**	**5.5kW**
Frequency Converter Model	49696	40995	49187	61475
Frequency Converter Code	1431F2	1431F3	1431F9	1431G5

19. ALARM HANDLING

When a malfunctioning occurs, the driver has two possible behaviors depending on the cause of the alarm:

BLOCKING	The cause of the alarm is very dangerous -> The driver stops immediately. To restart the fan, once the problem has been corrected, it is necessary to reset the fan or power the driver off for 5 minutes.
AUTO-RESTARTING	The cause of the alarm is contingent to a wrong setting or wrong working condition. The alarm indications are activated, but after some seconds the fan tries to restart automatically.

19.1 Monitoring

The alarms can be monitored through three different ways:
- Modbus Registers
- Blinking LED
- Digital Output

19.2 Modbus registers - Alarm description

In the following table, the alarms and the values stored in the related Modbus **Input Register 10** and **Input Register 17** are indicated.

Alarm 1	Alarm 2	Description	Actions	Type
0	0	**Default operation – No Errors**	No Actions	**FUNCTIONING OR STAND-BY**
1	0	**Memory error**	**Blocking condition**	**ALARM 1**
2	0	**Short Circuit**	**Blocking condition**	**ALARM 2**
3	0	**Loss of synchronism**	Auto-restarting condition*	**ALARM 3**
4	1	**Input Voltage outside range (only with motor stopped)**	Auto-restarting condition	**ALARM 4**
4	32	**BUS overvoltage (instantaneous measurement)**	Auto-restarting condition	**ALARM 4**
4	33	**BUS undervoltage (instantaneous measurement)**	Auto-restarting condition	**ALARM 4**
4	34	**Input relay not closed**	Auto-restarting condition	**ALARM 4**
4	49	**Missing phase – U cable disconnected**	**Blocking condition**	**ALARM 4**
4	50	**Missing phase – V cable disconnected**	**Blocking condition**	**ALARM 4**
4	51	**Missing phase – W cable disconnected**	**Blocking condition**	**ALARM 4**
4	52	**High starting current**	Auto-restarting condition	**ALARM 4**
4	113	**Overtemperature**	Auto-restarting condition	**ALARM 4**
4	255	**Loss of communication**	**Blocking condition**	**ALARM 4**

* After loss of synchronism, the auto-restarting condition is activated for 1.35 kW, 2.6 kW and 4 kW drivers. In case of loss of synchronism for 5.5 kW drivers, the blocking condition is activated after five failed attempts and the fan must be reset manually.

Check the blocking reasons and close the gate in case of opposite flow.

WARNING

The Driver is NOT protected against a very high-power supply voltage.
A very low power supply voltage during the motor running could damage Driver.

19.3 Blinking LED - Alarm description

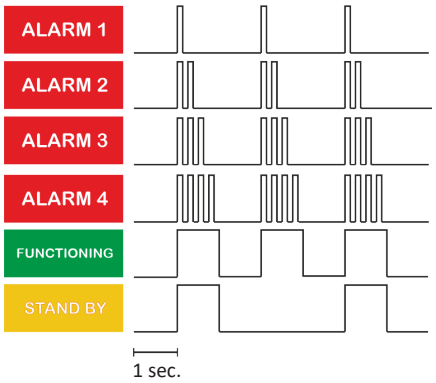

The system status can be displayed through the LED on the driver plate (see par. 9.6).
In the following figure on the right the blinking LED is shown.

19.4 Digital Alarm Output

The driver output can be configured as Alarm output by modifying the **Holding Register 46** to value 1. During the normal functioning, the value is 0V and, when an alarm occurs, the output value is 10V.

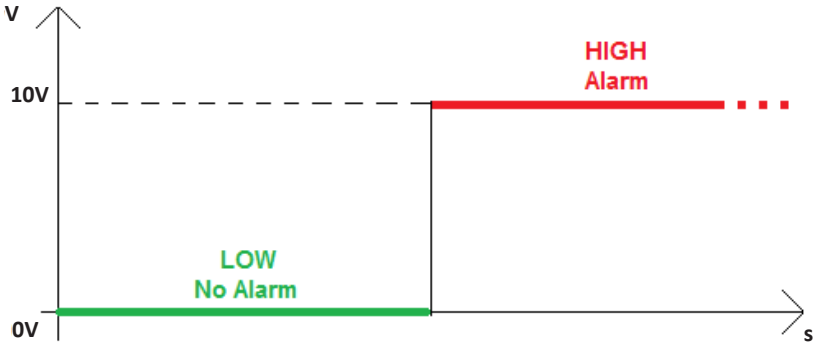

19.5 Alarm Reset

The alarms are automatically reset following the action of the table below:

Operating Mode	Input Type	Action
Analog	1, 4, 7, 10	Signal set to 0V
Fixed	2, 6, 9, 12	Registers 21, 39, 30 and 50 set to 0

As concerns the Temporary Modbus mode, it is necessary to reset the fan by setting the **Holding Register 0** to value=1 instead of setting to 0 the **Register 66**.

Temporary	0, 5, 8, 11	Register 0 set to 1

The Holding Register 0 is a general reset and works also in the Analog mode and Fixed mode.

20. DRIVER REPLACEMENT

These fans, their motors and drivers are designed for maintenance-free long-lasting operation and for high reliability. Under normal operating conditions, there are no parts inside which may need servicing.

If, under extreme conditions, a driver should need replacement, the Printed Circuit Boards of the driver shall never be removed from inside the driver enclosure. Removing them from their enclosure would compromise their thermal bonding onto the heat-sink and might easily damage some critical components.

The entire cylindrical enclosure is designed, instead, to be removed from the motor and replaced. The replacement of the driver does not affect the rotor and impeller assembly, and consequently does not require re-balancing of the fan.

Step-by-step replacement instructions can be provided on request.

21. AVAILABLE SOFTWARE

A freeware software is available on **Nicotra Gebhardt** site (http://www.nicotra-gebhardt.com) for monitoring the fan. The software can be used for configuring the fan and monitoring the performance.

Please refer to the related manual for more details.

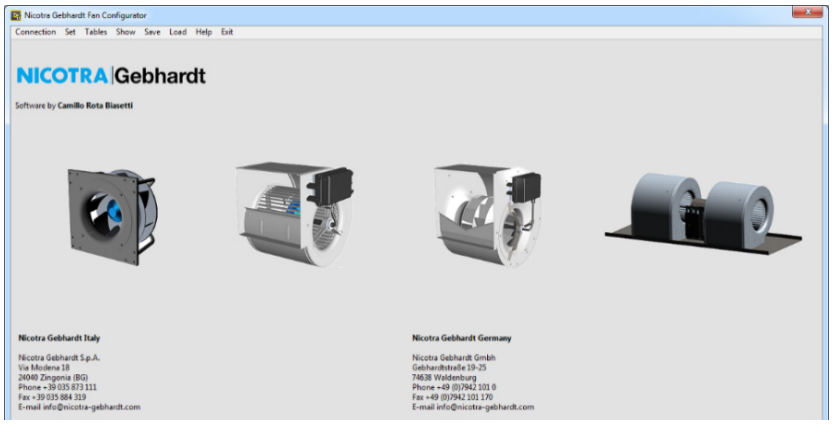

NOTES

NOTES

NOTES

Regal Beloit Italy S.p.A.

Via Modena, 18
24040 Ciserano (BG) ITALY
Phone +39 035 873 111
Fax +39 035 884 319
www.regalbeloit.com